Charter Industries | samet

CATALOGUE / 1

We have every right to change our products and prices without notice. Our company can not be held responsible for printing errors.

samet

New Retail Stands

New Retail Product Packaging

Alphabox
Retail Box Contents:
1 Set Slides
1 Set Sides
1 Set Decorative Covers
1 Set Front Connectors

Smartflow
Retail Box Contents:
1 Set Slides
1 Set Sides
1 Set Decorative Covers
1 Set Upper Front Connectors

Master Hinge
Retail Box Contents:
6 Hinges
6 Mounting Plates
6 Decorative Hinge Covers

In-Store Product Stands

Thanks to the transparent modules that we have created for the retail world, SAMET is now much more elegant and more eyeful!

Thanks to the transparency of the product modules, SAMET will now share its designs and functions in more detail.

Our in-store product stands, designed with our innovative approach, together with our offset-printed boxes will create a big difference in all sales areas and increase sales.

Wholesale Packaging

Alphabox
New Generation Drawer System Contents:
6 Sets Slide
6 Sets Side
6 Sets Decorative Cover
6 Sets Front Connector

SO CLASS
Ball-Bearing Slide System Contents:
12 Set Slides (46mm)

Master
New Generation Hinge System Contents:
125 Hinges

Contents >

Hinge Systems

Impro Adjustable Soft Close Hinge ... Page 10
Master Soft Close Hinge ... Page 12
Master Hinge ... Page 14
Master Restriction Clips ... Page 15
Samet 45° Soft Close Hinge / Samet 45° Hinge ... Page 16
Samet 45° Hinge ... Page 17
Samet 90° Soft Close Hinge / Samet 90° Hinge ... Page 18
Samet 90° Hinge ... Page 19
Samet 165° Soft Close Hinge ... Page 20
Star Track 3D Adjustable Hinge ... Page 22
Star Track 165° Hinge ... Page 24
Star Track Folding Door Hinge ... Page 26
Supreme Soft Close Face Frame Hinge ... Page 28
Supreme Face Frame Restriction Clips ... Page 29
Impro/Master/Samet Hinge Track Adjustable Mounting Plate ... Page 30
Impro/Master/Samet Hinge/Star Track Mounting Plate - 4 Holed ... Page 32
Star Track Adjustable Mounting Plate ... Page 34
Star Track Face Frame Adapter Mounting Plate ... Page 36
Impro/Master/Samet Hinge/Star Track Face Frame Adapter Adjustable Mounting Plate ... Page 38
Impro/Master/Samet Hinge Flush Inset Face Frame Adapter Plate ... Page 40
Hinge and Hinge Cup Decorative Covers ... Page 40
Hinge Dowel Screw ... Page 41
Hinge Dowel ... Page 41

Drawer Systems

Smartflow Soft-Close Wholesale Package ... Page 48
Smartflow Push-Open Soft-Close Wholesale Package ... Page 50
Smartflow Front Connector ... Page 51
Smartflow Gallery Railing ... Page 52
Smartflow Glass Side Panel ... Page 54
Smartflow In-Box Solutions ... Page 56
Smartflow In-Box Front Panel ... Page 57
Smartflow Front Railing Bar ... Page 57
Smartflow In-Box Front Connection Group ... Page 57
Smartflow Drawer Inside Dividing Systems ... Page 58
Smartflow Drawer Dividing System Adapter ... Page 59
Smartflow Drawer Inside Dividing Systems ... Page 59
Smartflow Drawer Dividing System Bar ... Page 59
Alphabox Soft-Close Wholesale Package ... Page 60
Alphabox Front Connector ... Page 61
Alphabox Gallery Railing ... Page 62
Smartflow / Alphabox Tabletop Drawer Assembly Device ... Page 63
Smartbox Wholesale Package 40 kg ... Page 64
Smartbox Backboard Holder Set Package ... Page 65
Smartbox Wholesale Package 65 kg ... Page 65
Smartbox Gallery Railing ... Page 66
Smartbox Drawer Front Stabilizer ... Page 67
Smartbox Front Panel Marking Template ... Page 67
Rollbox Soft-Close Wholesale Package ... Page 68
Smartflow / Alphabox / Rollbox / Rawbox Marking Template ... Page 69
Rawbox Soft-Close Wholesale Package ... Page 70
Smart Slide Single Extension Soft Close Lock-Fix ... Page 72
Smart Slide Lock ... Page 73

Smart Slide Full Extension Synchronization Soft Close Lock-Fix ... Page 74
Smart Slide Full Extension Synchronization Push-Open Soft Close Lock-Fix ... Page 76
Smart Slide Distance Bracket for In-Box applications ... Page 77
Smart Slide Drilling Jig ... Page 77
Smart Slide FF Full Extension Synchronization Soft Close Lock-Fix ... Page 78
Smart Slide FF Lock ... Page 79
Smart Slide FF Metal Rear Mount Bracket ... Page 79
SO CLASS Full Extension Slide - 46 mm ... Page 80
Ball-Bearing Slide 46 mm Rear Bracket ... Page 81
SO CLASS Full Extension Slide Soft Close - 46 mm ... Page 82
Ball-Bearing Slide 46 mm Rear Bracket ... Page 83

Lift-Up Door Systems

MultiLift Double Lift-Up Door Mechanism Wholesale Package ... Page 88
MultiLift Power Unit ... Page 89
D-Lite Lift Hingeless Lift-Up Door Mechanism Wholesale Package ... Page 90
D-Lite Lift Drilling Template ... Page 91
Gas Spring ... Page 92
Performa Lid Stay ... Page 92

Sliding Door Systems

SMT 75T Adjustable Tween Sliding Door System ... Page 96
SMT 75T Adjustable Tween Wheel Mechanism ... Page 97
SMT 75T 60,75,80 kg Aluminum Single Female Upper Rail ... Page 97
SMT 75T 75 Kg Aluminum Eco Double Female Lower Rail ... Page 97
Soft Close Mechanism ... Page 97

Accessories & Fitting Systems

Samfix Cam ... Page 102
Samfix Bolt ... Page 103
Samfix Dowel ... Page 103
Samfix Cover ... Page 103
Jetfix Dowel + Bolt ... Page 104
Daset Cabinet Hanger ... Page 106

Creative,Innovative Practical, Long lifecycle...

Samet has many Hinge System options that can be adapted to all types of furniture, Samet hinge systems are developed by considering every need of the consumer.

Life is now much easier and much more enjoyable for everyone..

Read the QR code to learn more about Hinge Systems.

Install a QR code reader for your operating system. Then start the QR code reader and keep your smartphone or tablet approximately 20 cm above the QR code.

impro

- Impro Adjustable Soft Close Hinge

Hinge Systems Quick reference list >

> Master Soft Close Hinge

- 45 mm
- 0 mm Crank
- Self-close / soft-close
- Woodscrew / Dowel

Unit Price **$ 3.509** - Page 12

> Master Tool-less Hinge

- 45 mm
- 0 mm - 9 mm - 18 mm Crank
- Self-close / soft-close
- Tool-less

Unit Price **$ 4.349**
Page 12

> Star Track 3D Adjustable Hinge

- 45 mm
- 0 mm Crank
- Self-close
- Dowel

Unit Price **$ 1.759**
Page 22

> Impro Adjustable Soft Close Hinge

- 45 mm
- 0 mm Crank
- Self-close / soft-close
- 5 Level Soft close adjustment
- Woodscrew / Dowel

Unit Price **$ 5.19** - Page 10

> Supreme Soft Close Face Frame Hinge

- 1-1/4" Overlay
- Track-Lock Mechanism
- Woodscrew / Dowel

Unit Price **$ 4.649** - Page 28

> Supreme Soft Close Face Frame Hinge

- 1/2" Overlay
- Track-Lock Mechanism
- Woodscrew / Dowel

Unit Price **$ 4.449**
Page 28

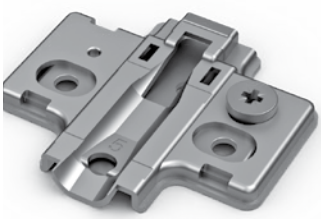

> Star Track Adjustable Mounting Plate

- 5 mm - 7 mm - 9 mm
- With Eccentric Screw
- Woodscrew / Euro Screw

Unit Price **$ 0.729**
Page 42

> Impro/Invo Plus/ Master Track Adjustable Mounting Plate

- 5 mm - 7 mm - 9 mm
- With Eccentric Screw
- Woodscrew / Dowel /Euro Screw

Unit Price **$ 0.599**
Page 36

Impro Adjustable Soft Close Hinge

- Opening Angle : 110°
- Cup Diameter : 35 mm
- Cup Depth : 12,50 mm
- Hinge Body : Steel
- Hinge Cup : Steel
- Crank Type : 0 mm
- Finish : Nickel
- Depth Adj. : ±2 mm
- Side Adj. : ±2 mm
- Packaging : 125 Pieces
- Tool free and simple assembling and disassembling of the cabinet doors. Only one touch on the Track mechanism is enough to release and fix the cabinet doors.
- 5 Level integrated soft close system.

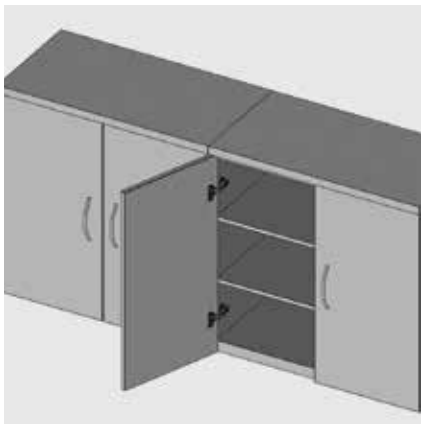

Full Overlay	**Crank 0**
DEFINITION	CODE
Woodscrew Version	10100311
Ø8 mm Plastic Dowel	101003111

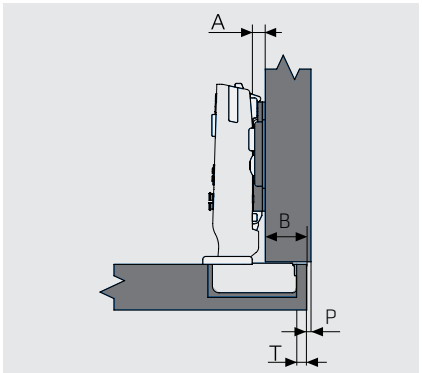

B - Overlay	A - Mounting Plate 5	7	9
12			3
13			4
14		3	5
15		4	6
16	3	5	7
17	4	6	
18	5	7	
19	6		
20	7		

T - Cup Distance

Min. Reveal for Doors (P)											
K	16	17	18	19	20	21	22	23	24	25	26
T=3	0.72	0.98	1.29	1.65	2.08	2.59	3.21	3.93	4.72	5.54	6.39
T=4	0.69	0.94	1.23	1.57	1.97	2.44	2.98	3.62	4.34	5.12	5.93
T=5	0.67	0.91	1.18	1.51	1.88	2.31	2.81	3.39	4.04	4.76	5.52
T=6	0.65	0.87	1.14	1.45	1.80	2.21	2.67	3.19	3.79	4.45	5.17
T=7	0.62	0.84	1.10	1.40	1.73	2.11	2.55	3.04	3.59	4.20	4.87

Fastening Options	
#6 Flat Head Woodscrew	
Ø8 Plastic Dowel	

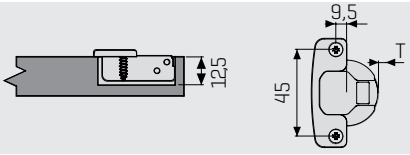

Impro Adjustable Soft Close Hinge

NO	CODE	DEFINITION/FEATURE	UNIT PRICE	PACKAGE CONTENT	PACKAGE PRICE	NOTE
1	10100311	0 Crank / Woodscrew / 45 mm	$ 5.19	125 Pcs	$ 648.75	
2	101003111	0 Crank / Ø8 Dowel / 45 mm	$ 5.39	125 Pcs	$ 673.75	

Master Soft Close Hinge

MASTER

- Opening Angle : 110°
- Cup Diameter : 35 mm
- Cup Depth : 12,50 mm
- Hinge Body : Steel
- Hinge Cup : Steel
- Crank Type : 0-9-18 mm
- Finish : Nickel
- Depth Adj. : +3/-2 mm
- Side Adj. : -1/+6 mm
- Packaging : 125 Pieces
- Tool free and simple assembling and disassembling of the cabinet doors. Only one touch on the Track mechanism is enough to release and fix the cabinet doors.

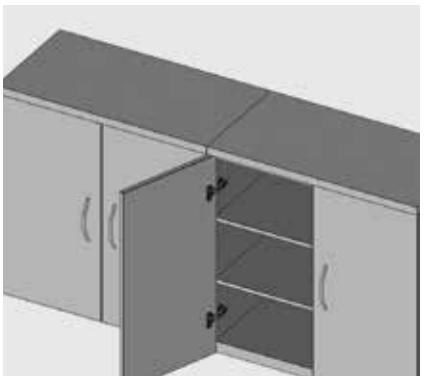

Full Overlay **Crank 0**

DEFINITION	CODE
Woodscrew Version	101004111
Ø8 mm Plastic Dowel	101004111
Tool-less	101004118

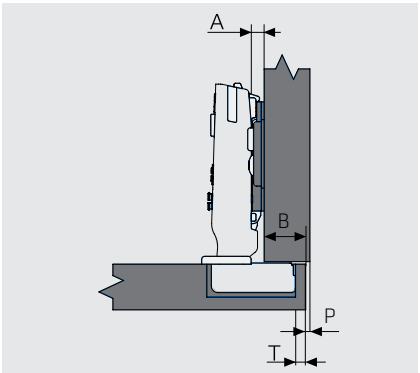

B - Overlay	A - Mounting Plate 5	7	9
12			3
13			4
14		3	5
15		4	6
16	3	5	7
17	4	6	
18	5	7	
19	6		
20	7		

T - Cup Distance

Half Overlay **Crank 9**

DEFINITION	CODE
Woodscrew Version	101004211
Ø8 mm Plastic Dowel	101004211
Tool-less	101004218

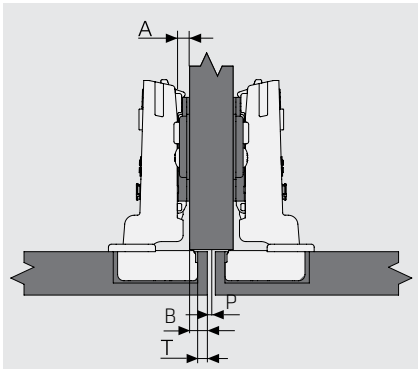

B - Overlay	A - Mounting Plate 5	7	9
3			3
4			4
5		3	5
6		4	6
7	3	5	7
8	4	6	
9	5	7	
10	6		
11	7		

T - Cup Distance

Inset **Crank 18**

DEFINITION	CODE
Woodscrew Version	101004311
Ø8 mm Plastic Dowel	101004311
Tool-less	101004318

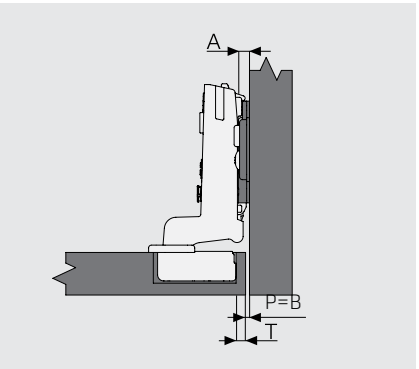

B - Overlay	A - Mounting Plate 5	7	9
6			3
5			4
4		3	5
3		4	6
2	3	5	7
1	4	6	
0	5	7	

T - Cup Distance

Min. Reveal for Doors (P)

K	16	17	18	19	20	21	22	23	24	25	26
T=3	0.72	0.98	1.29	1.65	2.08	2.59	3.21	3.93	4.72	5.54	6.39
T=4	0.69	0.94	1.23	1.57	1.97	2.44	2.98	3.62	4.34	5.12	5.93
T=5	0.67	0.91	1.18	1.51	1.88	2.31	2.81	3.39	4.04	4.76	5.52
T=6	0.65	0.87	1.14	1.45	1.80	2.21	2.67	3.19	3.79	4.45	5.17
T=7	0.62	0.84	1.10	1.40	1.73	2.11	2.55	3.04	3.59	4.20	4.87

Fastening Options

#6 Flat Head Woodscrew	
Ø8 mm Plastic Dowel	
Tool-less	

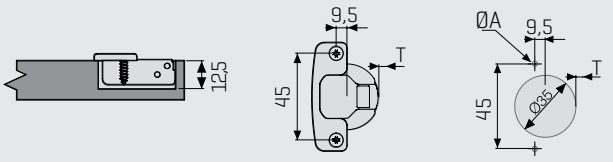

Master Soft Close Hinge

MASTER

NO	CODE	DEFINITION/FEATURE	UNIT PRICE	PACKAGE CONTENT	PACKAGE PRICE	NOTE
1	10100411	0 Crank / Woodscrew / 45 mm	$ 3.509	125 Pcs	$ 438.63	
2	101004111	0 Crank / Ø8 Dowel / 45 mm	$ 3.719	125 Pcs	$ 464.88	
3	101004118	0 Crank / Tool-less / 45 mm	$ 4.349	125 Pcs	$ 543.63	

NO	CODE	DEFINITION/FEATURE	UNIT PRICE	PACKAGE CONTENT	PACKAGE PRICE	NOTE
1	10100421	9 Crank / Woodscrew / 45 mm	$ 3.559	125 Pcs	$ 444.88	
2	101004211	9 Crank / Ø8 Dowel / 45 mm	$ 3.769	125 Pcs	$ 471.13	
3	101004218	9 Crank / Tool-less / 45 mm	$ 4.389	125 Pcs	$ 548.63	

NO	CODE	DEFINITION/FEATURE	UNIT PRICE	PACKAGE CONTENT	PACKAGE PRICE	NOTE
1	10100431	18 Crank / Woodscrew / 45 mm	$ 3.639	125 Pcs	$ 454.88	
2	101004311	18 Crank / Ø8 Dowel / 45 mm	$ 3.869	125 Pcs	$ 483.63	
3	101004318	18 Crank / Tool-less / 45 mm	$ 4.449	125 Pcs	$ 556.13	

Master Hinge

MASTER

- Opening Angle : 110°
- Cup Diameter : 35 mm
- Cup Depth : 12,50 mm
- Hinge Body : Steel
- Hinge Cup : Steel
- Crank Type : 0 mm
- Finish : Nickel
- Depth Adj. : +3/-2 mm
- Side Adj. : -1/+6 mm
- Packaging : 125 Pieces
- Tool free and simple assembling and disassembling of the cabinet doors. Only one touch on the Track mechanism is enough to release and fix the cabinet doors.

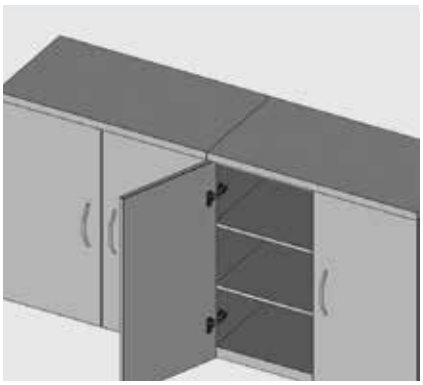

Full Overlay **Crank 0**

DEFINITION	CODE
Woodscrew Version	101014111
Ø8 mm Plastic Dowel	101014111
Tool-less	101014118

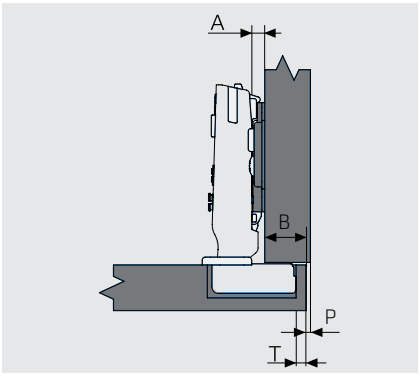

B - Overlay	A - Mounting Plate 5	7	9
12			3
13			4
14		3	5
15		4	6
16	3	5	7
17	4	6	
18	5	7	
19	6		
20	7		

T - Cup Distance

Half Overlay **Crank 9**

DEFINITION	CODE
Woodscrew Version	101014211
Ø8 mm Plastic Dowel	101014211
Tool-less	101014218

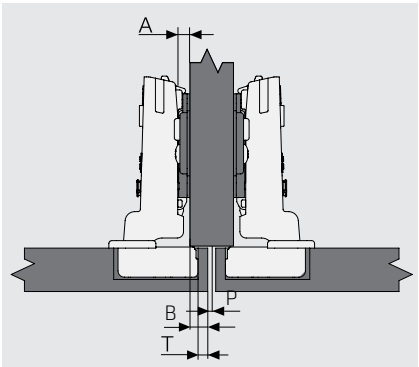

B - Bini	A - Mounting Plate 5	7	9
3			3
4			4
5		3	5
6		4	6
7	3	5	7
8	4	6	
9	5	7	
10	6		
11	7		

T - Cup Distance

Inset **Crank 18**

DEFINITION	CODE
Woodscrew Version	101014311
Ø8 mm Plastic Dowel	101014311
Tool-less	101014318

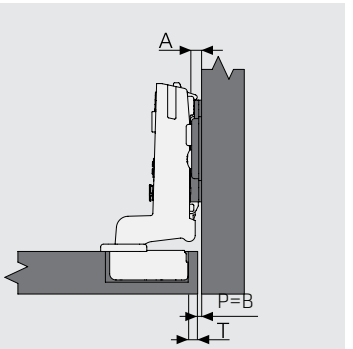

B - Bini	A - Mounting Plate 5	7	9
6			3
5			4
4		3	5
3		4	6
2	3	5	7
1	4	6	
0	5	7	

T - Cup Distance

Min. Reveal for Doors (P)

K	16	17	18	19	20	21	22	23	24	25	26
T=3	0.72	0.98	1.29	1.65	2.08	2.59	3.21	3.93	4.72	5.54	6.39
T=4	0.69	0.94	1.23	1.57	1.97	2.44	2.98	3.62	4.34	5.12	5.93
T=5	0.67	0.91	1.18	1.51	1.88	2.31	2.81	3.39	4.04	4.76	5.52
T=6	0.65	0.87	1.14	1.45	1.80	2.21	2.67	3.19	3.79	4.45	5.17
T=7	0.62	0.84	1.10	1.40	1.73	2.11	2.55	3.04	3.59	4.20	4.87

Fastening Options	
#6 Flat Head Woodscrew	
Ø8 mm Plastic Dowel	
Tool-less	

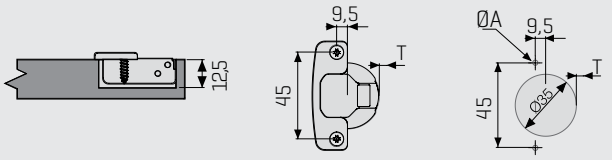

Master Hinge

MASTER

NO	CODE	DEFINITION/FEATURE	UNIT PRICE	PACKAGE CONTENT	PACKAGE PRICE	NOTE
1	10101411	0 Crank / Woodscrew / 45 mm	$ 1.729	125 Pcs	$ 216.13	
2	101014111	0 Crank / Ø8 Dowel / 45 mm	$ 1.949	125 Pcs	$ 243.63	
3	101014118	0 Crank / Tool-less / 45 mm	$ 2.569	125 Pcs	$ 321.13	

NO	CODE	DEFINITION/FEATURE	UNIT PRICE	PACKAGE CONTENT	PACKAGE PRICE	NOTE
1	10101421	9 Crank / Woodscrew / 45 mm	$ 1.799	125 Pcs	$ 224.88	
2	101014211	9 Crank / Ø8 Dowel / 45 mm	$ 2.009	125 Pcs	$ 251.13	
3	101014218	9 Crank / Tool-less / 45 mm	$ 2.599	125 Pcs	$ 324.88	

NO	CODE	DEFINITION/FEATURE	UNIT PRICE	PACKAGE CONTENT	PACKAGE PRICE	NOTE
1	10101431	18 Crank / Woodscrew / 45 mm	$ 1.869	125 Pcs	$ 233.63	
2	101014311	18 Crank / Ø8 Dowel / 45 mm	$ 2.079	125 Pcs	$ 259.88	
3	101014318	18 Crank / Tool-less / 45 mm	$ 2.659	125 Pcs	$ 332.38	

Master Restriction Clips

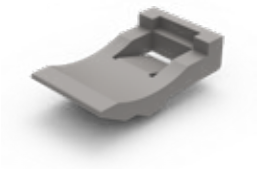

NO	CODE	DEFINITION/FEATURE	UNIT PRICE	PACKAGE CONTENT	PACKAGE PRICE	NOTE
1	12799919	Master 85°/86°	$ 0.099	5,000 Pcs	$ 495.00	

Samet 45° Soft Close Hinge / Samet 45° Hinge

- Opening Angle : 110°
- Cup Diameter : 35 mm
- Cup Depth : 12,50 mm
- Hinge Body : Zamac
- Hinge Cup : Steel
- Finish : Nickel
- Depth Adj. : ±2 mm
- Side Adj. : ±2 mm
- Packaging : 125 Pieces
- Tool free and simple assembling and disassembling of the cabinet doors. Only one touch on the Track mechanism is enough to release and fix the cabinet doors.

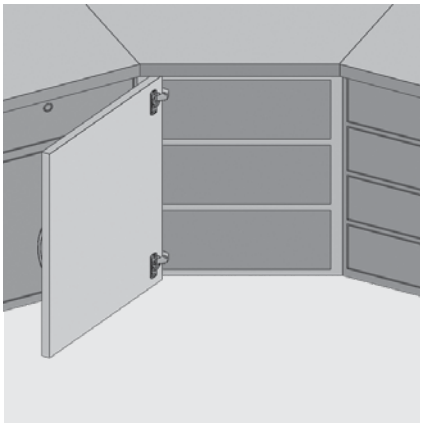

Samet 45° Soft Close Hinge

DEFINITION	CODE
Woodscrew Version	10100441
Ø8 mm Plastic Dowel	1010044l1
Ø8 mm Expandable Dowel	1010044l5

Samet 45° Hinge

DEFINITION	CODE
Woodscrew Version	10101441
Ø8 mm Plastiic Dowel	1010144l1
Ø8 mm Expandable Dowel	1010144l5

Fastening Options

#6 Flast Head Woodscrew	
Ø8 mm Expandable Dowel	
Ø8 mm Plastic Dowel	

Application Alternatives

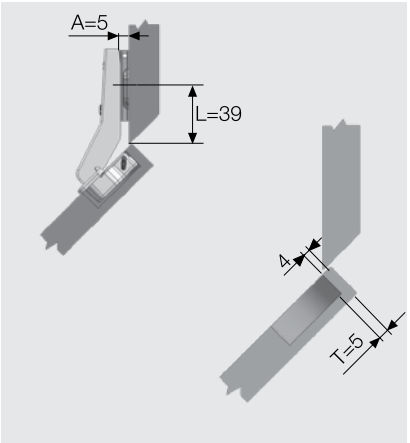

T=5 L=39 A=5

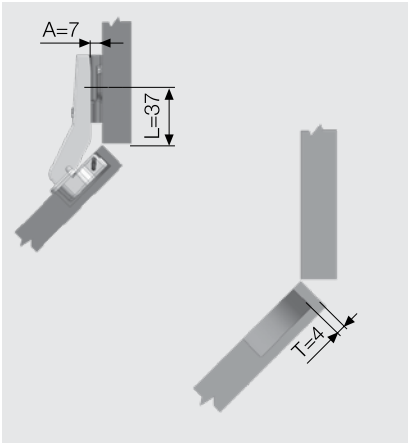

T=4 L=37 A=7

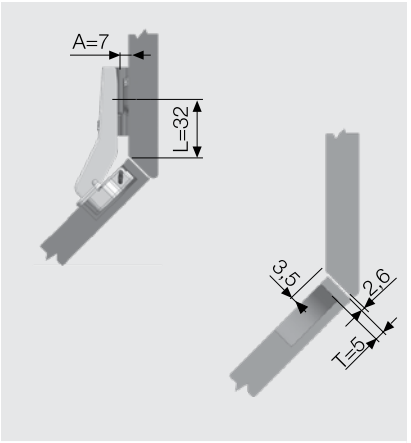

T=5 L=32 A=7

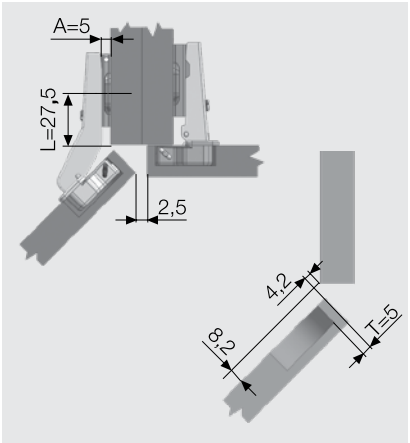

T=5 L=27,5 A=5

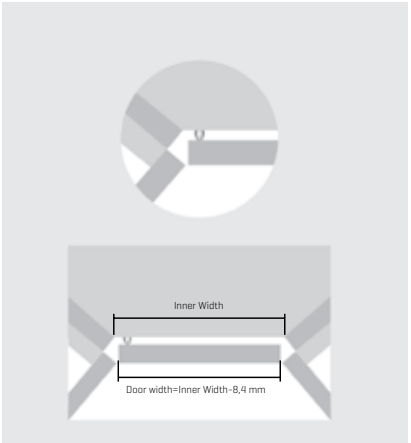

Cup Dimensions 45 mm

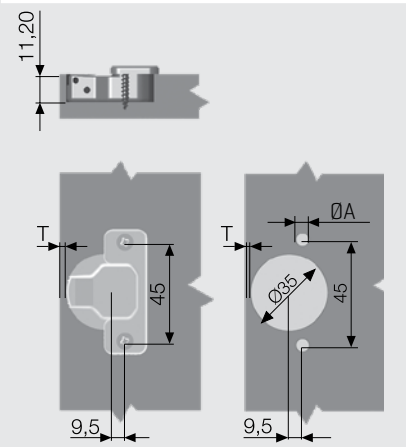

Samet 45° Soft Close Hinge

NO	CODE	DEFINITION/FEATURE	UNIT PRICE	PACKAGE CONTENT	PACKAGE PRICE	NOTE
1	10100441	45° / Soft Close / Woodscrew / 45 mm	$ 8.29	125 Pcs	$ 1,036.25	
2	101004411	45° / Soft Close / Ø8 Dowel / 45 mm	$ 8.49	125 Pcs	$ 1,061.25	
3	101004415	45° / Soft Close / Ø8 Expandable Dowel / 45 mm	$ 8.49	125 Pcs	$ 1,061.25	

Samet 45° Hinge

NO	CODE	DEFINITION/FEATURE	UNIT PRICE	PACKAGE CONTENT	PACKAGE PRICE	NOTE
1	10101441	45° / Woodscrew / 45 mm	$ 5.09	125 Pcs	$ 636.25	
2	101014411	45° / Ø8 Dowel / 45 mm	$ 5.29	125 Pcs	$ 661.25	
3	101014415	45° / Ø8 Expandable Dowel / 45 mm	$ 5.29	125 Pcs	$ 661.25	

Samet 90° Soft Close Hinge / Samet 90° Hinge

- Opening Angle : 110°
- Cup Diameter : 35 mm
- Cup Depth : 12,50 mm
- Hinge Body : Zamac
- Hinge Cup : Steel
- Finish : Nickel
- Depth Adj. : ±2 mm
- Side Adj. : ±2 mm
- Packaging : 125 Pieces
- Tool free and simple assembling and disassembling of the cabinet doors. Only one touch on the Track mechanism is enough to release and fix the cabinet doors.

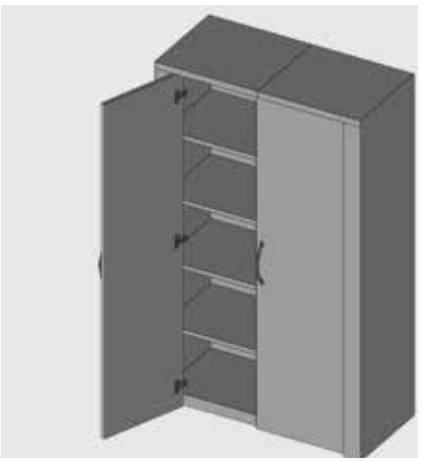

Samet 90° Soft Close Hinge

DEFINITION	CODE
Woodscrew Version	10100461
Ø8 mm Plastic Dowel	101004611
Ø8 mm Expandable Dowel	101004615

Samet 90° Hinge

DEFINITION	CODE
Woodscrew Version	10101461
Ø8 mm Plastic Dowel	101014611
Ø8 mm Expandable Dowel	101014615

Fastening Options

- #6 Flast Head Woodscrew
- Ø8 mm Expandable Dowel
- Ø8 mm Plastic Dowel

Application Alternatives

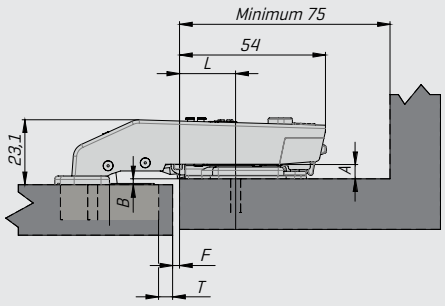

T=5	L=20	A=5	B=2	F=2
T=4	L=20	A=5	B=2	F=3

* B dimension should be minimum 0,5

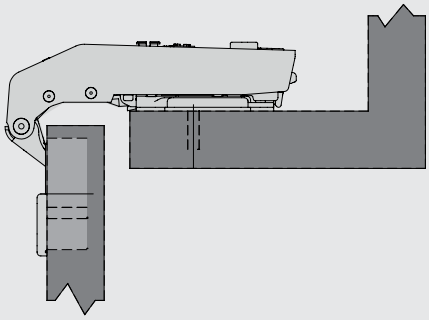

Cup Dimensions 45 mm

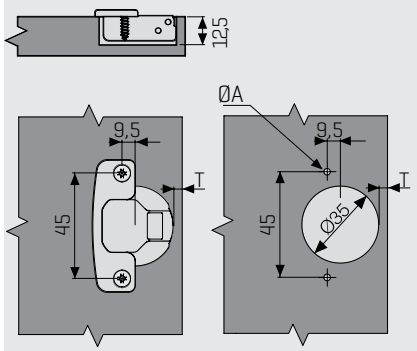

Samet 90° Soft Close Hinge

NO	CODE	DEFINITION/FEATURE	UNIT PRICE	PACKAGE CONTENT	PACKAGE PRICE	NOTE
1	101004611	90° / Soft Close / Woodscrew / 45 mm	$ 8.29	125 Pcs	$ 1,036.25	
2	101004611	90° / Soft Close / Ø8 Dowel / 45 mm	$ 8.49	125 Pcs	$ 1,061.25	
3	101004615	90° / Soft Close / Ø8 Expandable Dowel / 45 mm	$ 8.49	125 Pcs	$ 1,061.25	

Samet 90° Hinge

NO	CODE	DEFINITION/FEATURE	UNIT PRICE	PACKAGE CONTENT	PACKAGE PRICE	NOTE
1	101014611	90° / Woodscrew / 45 mm	$ 5.09	125 Pcs	$ 636.25	
2	101014611	90° / Ø8 Dowel / 45 mm	$ 5.29	125 Pcs	$ 661.25	
3	101014615	90° / Ø8 Expandable Dowel / 45 mm	$ 5.29	125 Pcs	$ 661.25	

Samet 165° Soft Close Hinge

- Opening Angle : 165°
- Cup Diameter : 35 mm
- Cup Depth : 12,50 mm
- Hinge Body : Steel
- Hinge Cup : Steel
- Crank Type : 0 mm
- Finish : Nickel
- Depth Adj. : ±2 mm
- Side Adj. : ±2 mm
- Packaging : 125 Pieces
- Tool free and simple assembling and disassembling of the cabinet doors. Only one touch on the Track mechanism is enough to release and fix the cabinet doors.

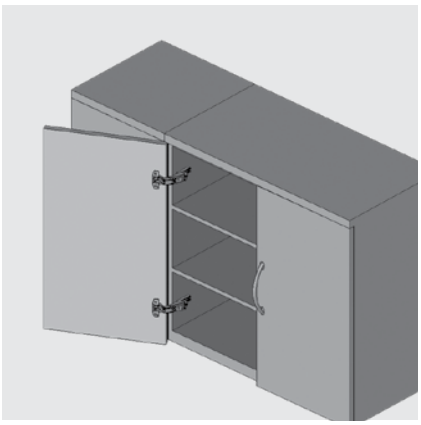

DEFINITION	CODE
Woodscrew Version	10100571
Ø8 mm Plastic Dowel	101005711
Ø8 mm Expandable Dowel	101005715

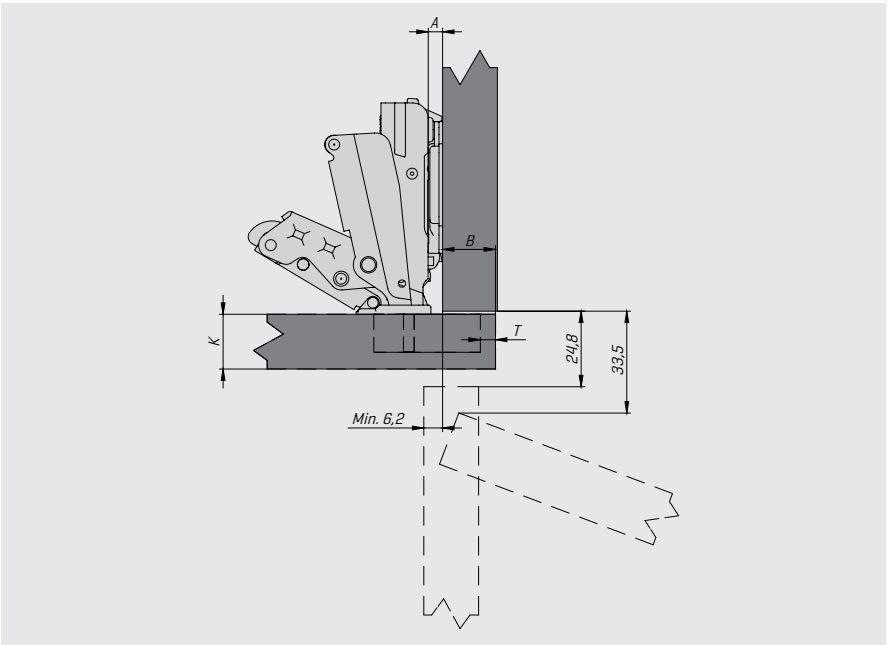

		A - Mounting Plate		
		5	7	9
B - Overlay	11			3
	12			4
	13		3	5
	14		4	6
	15	3	5	7
	16	4	6	
	17	5	7	
	18	6		
	19	7		
		T - Cup Distance		

Fastening Options	
#6 Flast Head Woodscrew	
Ø8 mm Expandable Dowel	
Ø8 mm Plastic Dowel	

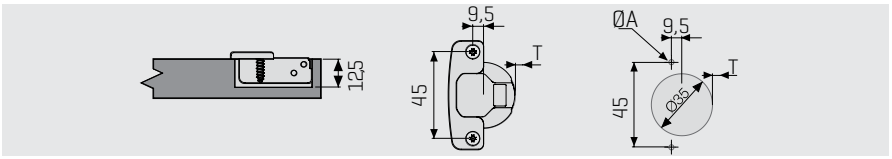

Samet 165° Soft Close Hinge

samet

NO	CODE	DEFINITION/FEATURE	UNIT PRICE	PACKAGE CONTENT	PACKAGE PRICE	NOTE
1	10100571	165° / Soft Close / Woodscrew / 45 mm	$ 13.89	125 Pcs	$ 1,736.25	
2	101005711	165° / Soft Close / Ø8 Dowel / 45 mm	$ 14.49	125 Pcs	$ 1,811.25	
3	101005715	165° / Soft Close / Ø8 Expandable Dowel / 45 mm	$ 14.49	125 Pcs	$ 1,811.25	

Star Track 3D Adjustable Hinge

STAR TRACK

- Opening Angle : 110°
- Cup Diameter : 35 mm
- Cup Depth : 11,2 mm
- Hinge Body : Steel
- Hinge Cup : Steel
- Crank Type : 0-9-18 mm
- Finish : Nickel
- Depth Adj. : ±2 mm
- Side Adj. : +7 mm / -1 mm
- Packaging : 250 Pieces
- Tool free and simple assembling and disassembling of the cabinet doors. Only one touch on the Track mechanism is enough to release and fix the cabinet doors.

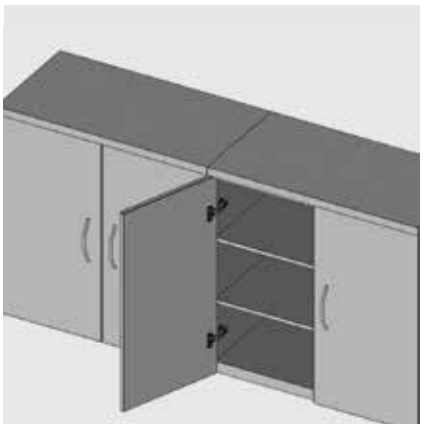

Full Overlay	**Crank 0**

DEFINITION	CODE
Ø8 mm Plastic Dowel	101002111

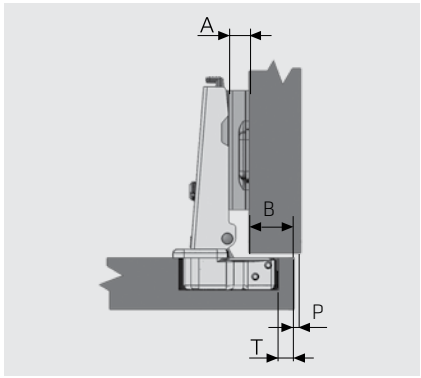

B - Overlay	A - Mounting Plate 5	7	9
12			3
13			4
14		3	5
15		4	6
16	3	5	7
17	4	6	
18	5	7	
19	6		
20	7		

T - Cup Distance

Min. Reveal for Doors (P)											
K	16	17	18	19	20	21	22	23	24	25	26
T=3	0.72	0.98	1.29	1.65	2.08	2.59	3.21	3.93	4.72	5.54	6.39
T=4	0.69	0.94	1.23	1.57	1.97	2.44	2.98	3.62	4.34	5.12	5.93
T=5	0.67	0.91	1.18	1.51	1.88	2.31	2.81	3.39	4.04	4.76	5.52
T=6	0.65	0.87	1.14	1.45	1.80	2.21	2.67	3.19	3.79	4.45	5.17
T=7	0.62	0.84	1.10	1.40	1.73	2.11	2.55	3.04	3.59	4.20	4.87

Fastening Options
Ø8 mm Plastic Dowel

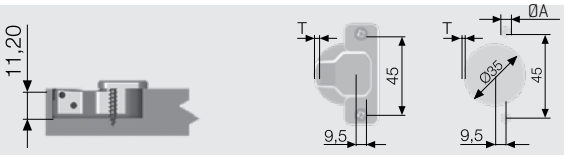

Star Track 3D Adjustable Hinge

STAR TRACK

NO	CODE	DEFINITION/FEATURE	UNIT PRICE	PACKAGE CONTENT	PACKAGE PRICE	NOTE
1	101002111	0 Crank / Ø8 Dowel / 45 mm	$ 1.759	250 Pcs	$ 439.75	

Star Track 165° Hinge

STAR TRACK

- Opening Angle : 165°
- Cup Diameter : 35 mm
- Cup Depth : 11,2 mm
- Hinge Body : Zamac+Steel
- Hinge Cup : Steel
- Crank Type : 0-9-18 mm
- Finish : Nickel
- Depth Adj. : ±3 mm
- Side Adj. : ±2 mm
- Packaging : 125 Pieces
- Tool free and simple assembling and disassembling of the cabinet doors. Only one touch on the Track mechanism is enough to release and fix the cabinet doors.

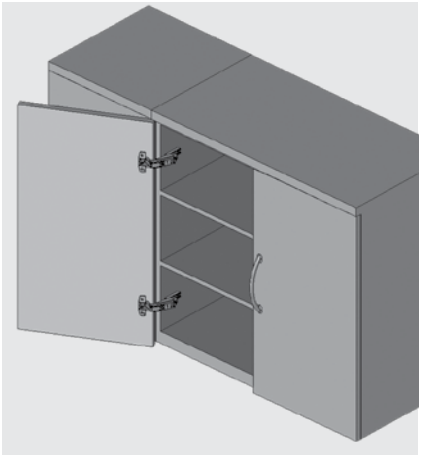

Full Overlay	**Crank 0**
Code List According to Cup Connection Types	
DEFINITION	CODE
Woodscrew Version	1019011
Ø8 mm Plastic Dowel	10190112

Fastening Options	
#6 Flast Head Woodscrew	
Ø8 Plastic Dowel	

Application Dimension

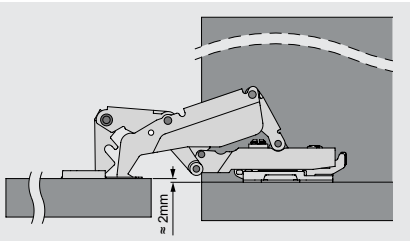

Star Track 165° Hinge

STAR TRACK

NO	CODE	DEFINITION/FEATURE	UNIT PRICE	PACKAGE CONTENT	PACKAGE PRICE	NOTE
1	1019011	0 Crank / Woodscrew / 45 mm	$ 8.49	125 Pcs	$ 1,061.25	
2	10190112	0 Crank / Ø8 Dowel / 45 mm	$ 9.19	125 Pcs	$ 1,148.75	

Star Track Folding Door Hinge

STAR TRACK

- Opening Angle : 160°
- Application with Star Track 165° Hinge and Star Hinge 165° is recommended.
- Cup Diameter : 35 mm
- Cup Depth : 11,2 mm
- Hinge Body : Zamac
- Hinge Cup : Steel
- Finish : Nickel
- Depth Adj. : ±3 mm
- Side Adj. : +4 mm / -2 mm
- Packaging : 250 Pieces
- Tool free and simple assembling and disassembling of the cabinet doors. Only one touch on the Track mechanism is enough to release and fix the cabinet doors.

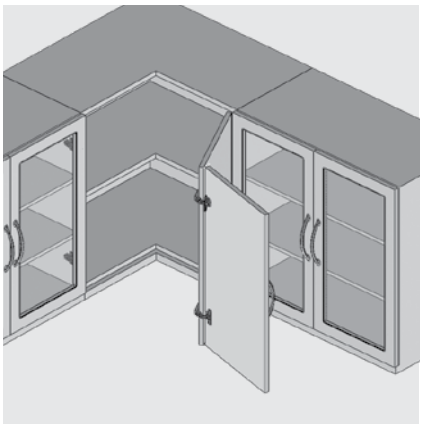

DEFINITION	CODE
Woodscrew Version	1018061
Ø8 mm Plastic Dowel	1018901

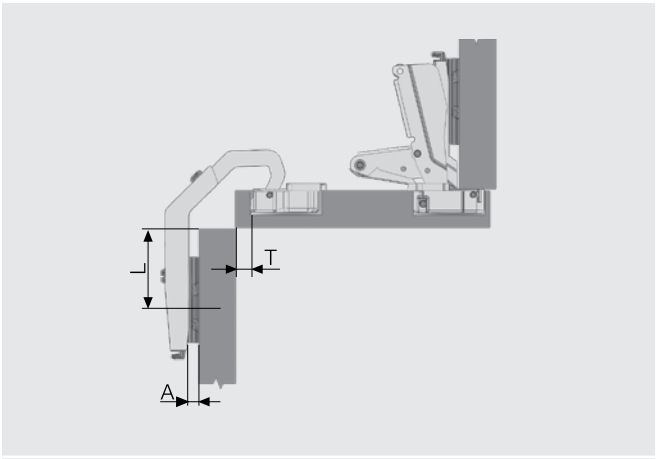

T=5 L=37 A=5

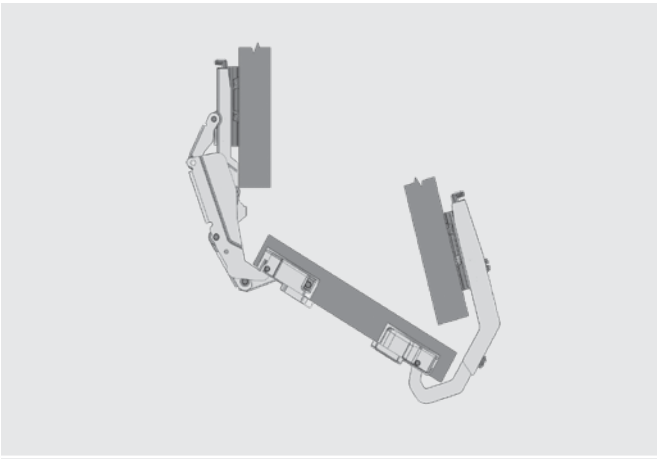

Fastening Options	
#6 Flat Head Woodscrew	
Ø8 mm Plastic Dowel	

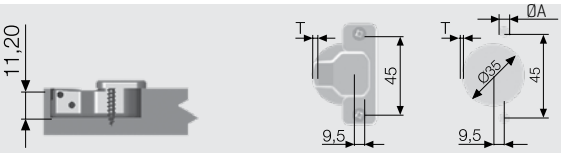

Star Track Folding Door Hinge

STAR TRACK

NO	CODE	DEFINITION/FEATURE	UNIT PRICE	PACKAGE CONTENT	PACKAGE PRICE	NOTE
1	1018061	Folding / Woodscrew / 45 mm	$ 9.39	125 Pcs	$ 1,173.75	
2	1018901	Folding / Ø8 Dowel / 45 mm	$ 9.59	125 Pcs	$ 1,198.75	

Supreme Soft Close Face Frame Hinge

samet | SUPREME

Fastening Options / Hinge Cup	
#6 Flast Head Woodscrew	
Ø8 mm Plastic Dowel	

1-1/4" Overlay

Opening Angle	: 105°
Cup diameter	: 35 mm
Cup distance	: 3 mm
Cup depth	: 11mm
6-way-adjustable	
Depth adjustment	: +3/-0mm
Side adjustment	: ±2mm
Height adjustment	: ±3mm

Integrated soft close mechanism with on/off feature
Maximum Face Frame thickness: 19mm
Remove and re-install doors with Tool-less slide locking track system

1/2" Overlay

Opening Angle	: 105°
Cup diameter	: 35mm
Cup distance	: 3mm
Cup depth	: 11mm
6-way-adjustable	
Depth adjustment	: +2,5/-0,5mm
Side adjustment	: ±2mm
Height adjustment	: ±3mm

Integrated soft close mechanism with on/off feature
Maximum Face Frame thickness: 19mm
Remove and re-install doors with Tool-less slide locking track system

1-1/4" Overlay - Application Dimension

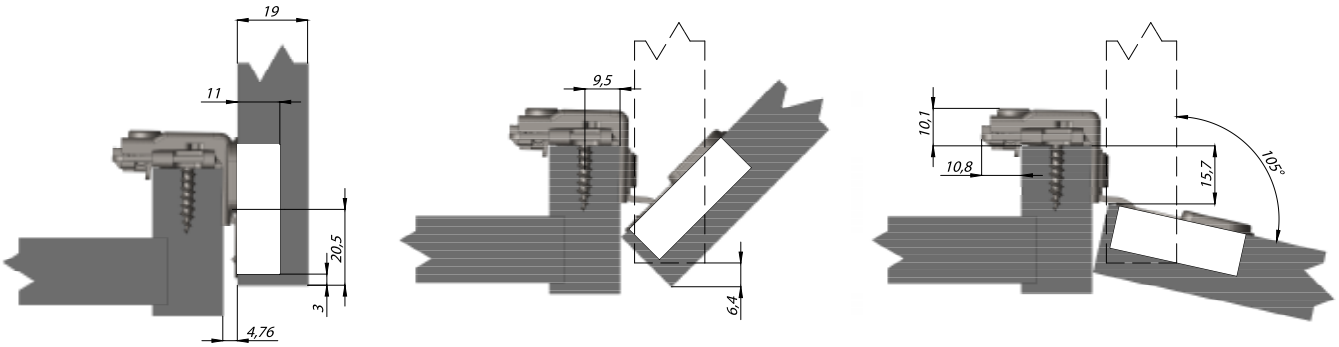

1/2" Overlay - Application Dimension

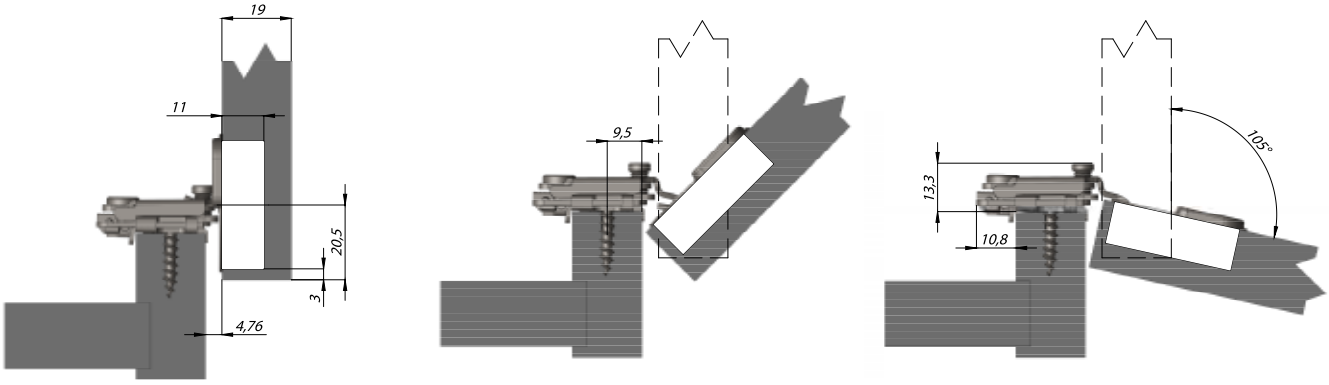

Track-Lock Easy Assembly & Disassembly

Supreme Soft Close Face Frame Hinge

samet | SUPREME

NO	CODE	DEFINITION/FEATURE	UNIT PRICE	PACKAGE CONTENT	PACKAGE PRICE	NOTE
1	1015101	1/2" Overlay / Ø8 Dowel / 45 mm	$ 4.549	200 Pcs	$ 909.80	
2	1015102	1-1/4" Overlay / Ø8 Dowel / 45 mm	$ 4.749	200 Pcs	$ 949.80	
3	1015111	1/2" Overlay / Woodscrew / 45 mm	$ 4.449	200 Pcs	$ 889.80	
4	1015112	1-1/4" Overlay / Woodscrew / 45 mm	$ 4.649	200 Pcs	$ 929.80	

Supreme Face Frame Restriction Clips

samet | SUPREME

NO	CODE	DEFINITION/FEATURE	UNIT PRICE	PACKAGE CONTENT	PACKAGE PRICE	NOTE
1	12799923	85°/86°	$ 0.099	500 Pcs	$ 49.50	

Impro/Master/Samet Hinge Track Adjustable Mounting Plate

- Material : Steel
- Finish : Nickel
- Packaging: 125 Pieces
- Applicable to adjust up-down without releasing hinge and mounting plate.
- Applicable to adjust +/- 2 mm up-down by one move.
- Assembling and disassembling feature with one touch on the door without using screw driver.

	5 mm
DEFINITION	CODE
Woodscrew Version	10263851
6,3x14EuroScrew	10263854
Ø5x7,5 Expandable Dowel	10263856
Ø5x11,5 Expandable Dowel	10263857

	7 mm
DEFINITION	CODE
Woodscrew Version	10263871
6,3x14EuroScrew	10263874
Ø5x7,5 Expandable Dowel	10263876
Ø5x11,5 Expandable Dowel	10263877

	9 mm
DEFINITION	CODE
Woodscrew Version	10263891
6,3x14EuroScrew	10263894
Ø5x11,5 Expandable Dowel	10263897

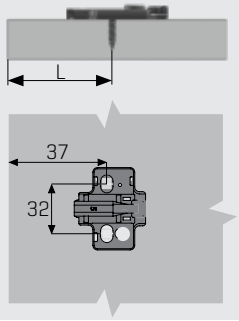

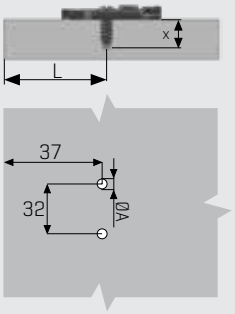

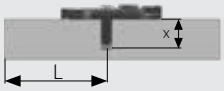

#6 Flat Head Woodscrew
Euro Screw
Ø5 Dowel

Fastening Options	
#6 Flat Head Woodscrew	
Euro Screw	
5 mm Plastic Expandable Dowel	

Impro/Master/Samet Hinge Track Adjustable Mounting Plate

NO	CODE	DEFINITION/FEATURE	UNIT PRICE	PACKAGE CONTENT	PACKAGE PRICE	NOTE
1	10263851	5 mm / Woodscrew	$ 0.599	125 Pcs	$ 74.88	
2	10263854	5 mm / 6,3x14 Euro Screw	$ 0.809	125 Pcs	$ 101.13	
3	10263856	5 mm / Ø5x7,5 Dowel	$ 0.809	125 Pcs	$ 101.13	
4	10263857	5 mm / Ø5x11,5 Dowel	$ 0.809	125 Pcs	$ 101.13	

NO	CODE	DEFINITION/FEATURE	UNIT PRICE	PACKAGE CONTENT	PACKAGE PRICE	NOTE
1	10263871	7 mm / Woodscrew	$ 0.619	125 Pcs	$ 77.38	
2	10263874	7 mm / 6,3x14 Euro Screw	$ 0.839	125 Pcs	$ 104.88	
3	10263876	7 mm / Ø5x7,5 Dowel	$ 0.839	125 Pcs	$ 104.88	
4	10263877	7 mm / Ø5x11,5 Dowel	$ 0.839	125 Pcs	$ 104.88	

NO	CODE	DEFINITION/FEATURE	UNIT PRICE	PACKAGE CONTENT	PACKAGE PRICE	NOTE
1	10263891	9 mm / Woodscrew	$ 0.659	125 Pcs	$ 82.38	
2	10263894	9 mm / 6,3x14 Euro Screw	$ 0.869	125 Pcs	$ 108.63	
3	10263897	9 mm / Ø5x11,5 Dowel	$ 0.869	125 Pcs	$ 108.63	

Impro/Master/Samet Hinge/Star Track Mounting Plate - 4 Holed

- Material : Steel
- Finish : Nickel
- Packaging : 125 Pieces
- Applicable to adjust +/- 2 mm to up & down

5 mm	
DEFINITION	CODE
6,3x14 Euro Screw	10265844

7 mm	
DEFINITION	CODE
6,3x14 Euro Screw	10265864

9 mm	
DEFINITION	CODE
6,3x14 Euro Screw	10265884

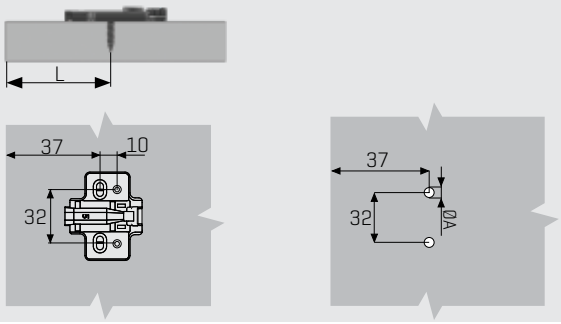

Fastening Options
Euro Screw

Impro/Master/Samet Hinge/Star Track Mounting Plate - 4 Holed

NO	CODE	DEFINITION/FEATURE	UNIT PRICE	PACKAGE CONTENT	PACKAGE PRICE	NOTE
1	10265844	5 mm **/** 6,3x14 Euro Screw	$ 0.479	125 Pcs	$ 59.88	

NO	CODE	DEFINITION/FEATURE	UNIT PRICE	PACKAGE CONTENT	PACKAGE PRICE	NOTE
2	10265864	7 mm **/** 6,3x14 Euro Screw	$ 0.499	125 Pcs	$ 62.38	

NO	CODE	DEFINITION/FEATURE	UNIT PRICE	PACKAGE CONTENT	PACKAGE PRICE	NOTE
3	10265884	9 mm **/** 6,3x14 Euro Screw	$ 0.499	125 Pcs	$ 62.38	

Star Track Adjustable Mounting Plate

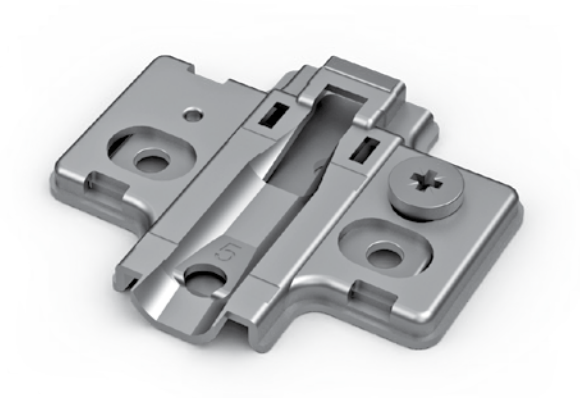

- Material : Steel
- Finish : Nickel
- Packaging : 250 Piece
- Applicable to adjust up-down without releasing hinge and mounting plate.
- Applicable to adjust +/- 2 mm up-down by one move.

Star Track Adjustable Mounting Plate **5 mm**	
DEFINITION	CODE
Star Track Adj. Mounting Plate Woodscrew Version	10260751
Star Track Adj. Mounting Plate 6,3x14 Euro Screw	10260754

Star Track Adjustable Mounting Plate **7 mm**	
DEFINITION	CODE
Star Track Adj. Mounting Plate Woodscrew Version	10260771
Star Track Adj. Mounting Plate 6,3x14 Euro Screw	10260774

Star Track Adjustable Mounting Plate **9 mm**	
DEFINITION	CODE
Star Track Adj. Mounting Plate Woodscrew Version	10260791
Star Track Adj. Mounting Plate 6,3x14 Euro Screw	10260794

Dimensions

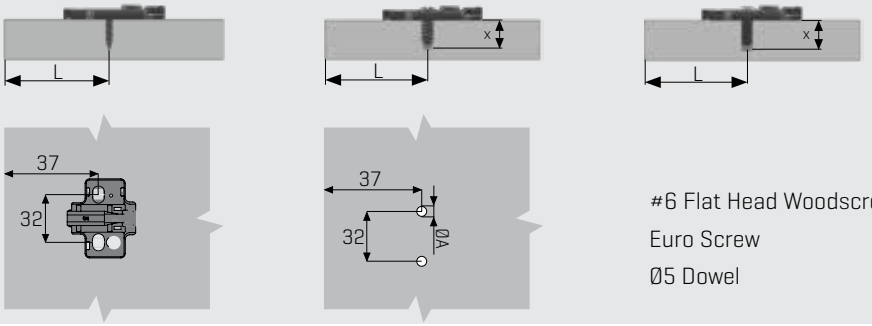

#6 Flat Head Woodscrew
Euro Screw
Ø5 Dowel

Screw Options	
#6 Flat Head Woodscrew	
Euro Screw	

Star Track Adjustable Mounting Plate

NO	CODE	DEFINITION/FEATURE	UNIT PRICE	PACKAGE CONTENT	PACKAGE PRICE	NOTE
1	10260751	5 mm **/** Woodscrew	$ 0.729	250 Pcs	$ 182.25	
2	10260754	5 mm **/** 6,3x14 Euro Screw	$ 0.959	250 Pcs	$ 239.75	

NO	CODE	DEFINITION/FEATURE	UNIT PRICE	PACKAGE CONTENT	PACKAGE PRICE	NOTE
1	10260771	7 mm **/** Woodscrew	$ 0.749	250 Pcs	$ 187.25	
2	10260774	7 mm **/** 6,3x14 Euro Screw	$ 0.979	250 Pcs	$ 244.75	

NO	CODE	DEFINITION/FEATURE	UNIT PRICE	PACKAGE CONTENT	PACKAGE PRICE	NOTE
1	10260791	9 mm **/** Woodscrew	$ 0.819	250 Pcs	$ 204.75	
2	10260794	9 mm **/** 6,3x14 Euro Screw	$ 1.039	250 Pcs	$ 259.75	

Star Track Face Frame Adapter Mounting Plate

· Material : Zamac
· Packaging : 250 Piece
· The axis is vertically adjustable.

Star Track Face Frame Adapter Mounting Plate **5 mm**	
Code List	
DEFINITION	CODE
Star Track Face Frame Adapter Mounting Plate 5 mm	102604

Star Track Face Frame Adapter Mounting Plate **9 mm**	
Code List	
DEFINITION	CODE
Star Track Face Frame Adapter Mounting Plate 9 mm	102605

Dimensions

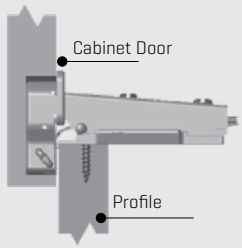

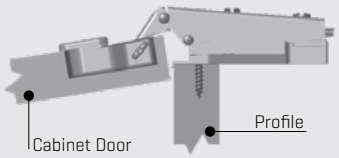

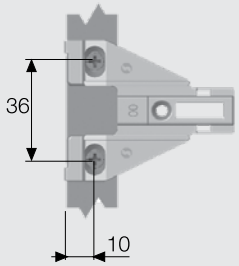

Screw Options	
#6 Flat Head Woodscrew	

Star Track Face Frame Adapter Mounting Plate

NO	CODE	DEFINITION/FEATURE	UNIT PRICE	PACKAGE CONTENT	PACKAGE PRICE	NOTE
1	102604	5 mm	$ 1.029	250 Pcs	$ 257.25	
2	102605	9 mm	$ 1.149	250 Pcs	$ 287.25	

Impro/Master/Samet Hinge/Star Track Face Frame Adapter Adjustable Mounting Plate

- Material : Steel
- Finish : Nickel
- Packaging : 300 Piece
- Applicable to adjust +/- 2 mm to up & down

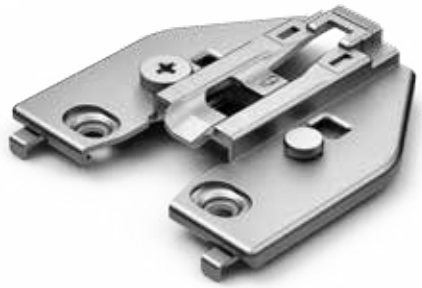

DEFINITION	CODE
5mm	1T10280010
9mm	1T10280011

ØA(mm)= #Flat Head Woodscrew; Ø2,5x5

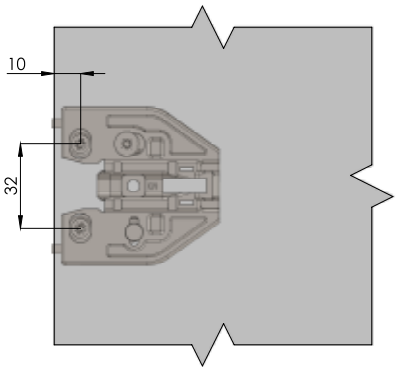

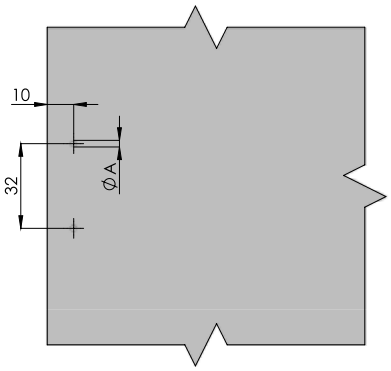

Impro/Master/Samet Hinge/Star Track Face Frame Adapter Adjustable Mounting Plate

NO	CODE	DEFINITION/FEATURE	UNIT PRICE	PACKAGE CONTENT	PACKAGE PRICE	NOTE
1	1T10280010	5 mm	$ 1.169	300 Pcs	$ 350.70	
2	1T10280011	9 mm	$ 1.289	300 Pcs	$ 386.70	

Impro/Master/Samet Hinge Flush Inset Face Frame Adapter Plate

NO	CODE	DEFINITION/FEATURE	UNIT PRICE	PACKAGE CONTENT	PACKAGE PRICE	NOTE
1	10299950	14 mm / Screw On	$ 2.899	125 Pcs	$ 362.38	

- Use with 9 mm Crank hinges - 3 mm Fixed hinge cup drilling distance = 2 mm gap

Hinge and Hinge Cup Decorative Covers

NO	CODE	DEFINITION/FEATURE	UNIT PRICE	PACKAGE CONTENT	PACKAGE PRICE	NOTE
1	10258001	Master / with Logo	$ 0.139	250 Pcs	$ 34.75	

NO	CODE	DEFINITION/FEATURE	UNIT PRICE	PACKAGE CONTENT	PACKAGE PRICE	NOTE
1	1025504	Impro / Master / 45 mm	$ 0.189	250 Pcs	$ 47.25	

Hinge Dowel Screw

NO	CODE	DEFINITION/FEATURE	UNIT PRICE	PACKAGE CONTENT	PACKAGE PRICE	NOTE
1	122143	Ø4x11 mm	$ 0.039	10,000 Pcs	$ 390.00	

Hinge Dowel

NO	CODE	DEFINITION/FEATURE	UNIT PRICE	PACKAGE CONTENT	PACKAGE PRICE	NOTE
1	107195	Ø8 **/** Plastic Square **/** Color: Red	$ 0.109	10,000 Pcs	$ 1,090.00	

hinge systems

Dimension Charts

Requried Hinge Quantity for Wooden Doors

* Quantity of hinges can be calculated according to door dimensions and weigtht of the door by referring the diagram.
* The number of hinges showed in table should be considered as guide. The number of hinges should be decided with trial installation for uncertain situation.
* Door width is taken as up to 600 mm.

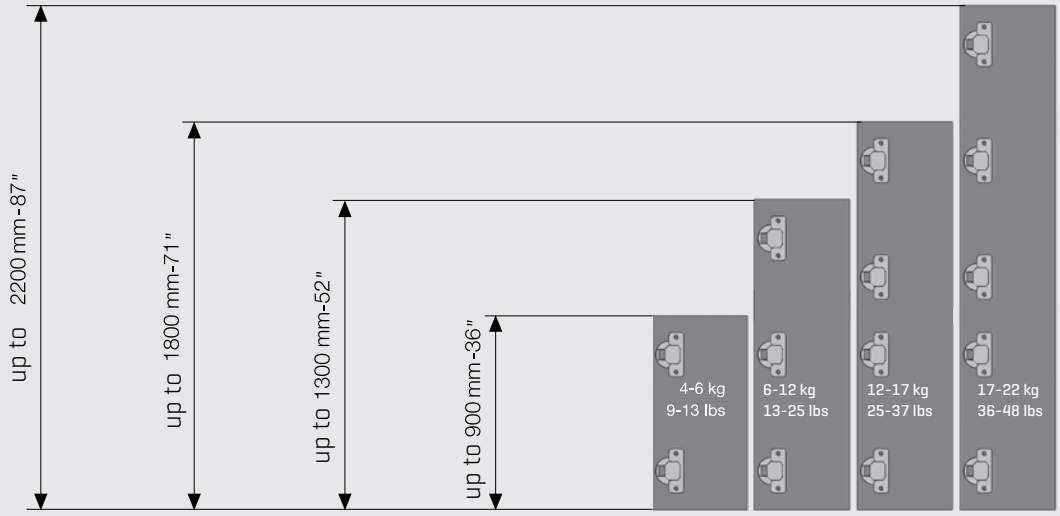

Required Master Soft Close Hinge quantity, according to the door dimensions

* Door width is taken as up to 600 mm.
* Number of soft close hinges can change according to the weight of the door. The number of hinges should be decided with trial installation for uncertain situation.

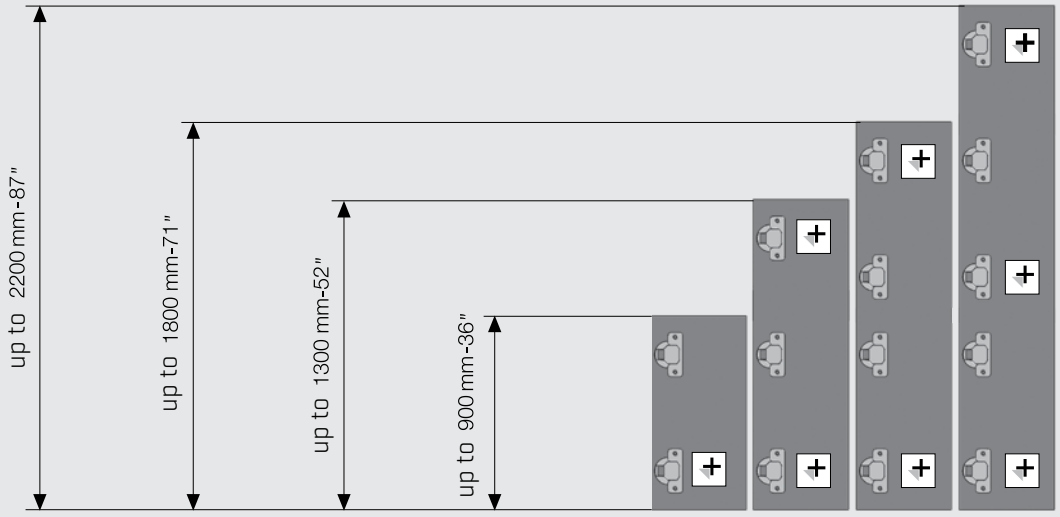

Smart Solutions for Drawers...

High motion technology, modern lines, different accessory options and Drawer Systems that you can personalize according to your needs, provide innovative solutions to living spaces.

Read the QR code to learn more about drawer systems.

Install a QR code reader for your operating system. Then start the QR code reader and keep your smartphone or tablet approximately 20 cm above the QR code.

SO CLASS

- SO CLASS Ball-Bearing Slide System

Drawer Systems Quick reference list >

> Smartflow Drawer Soft-Close Wholesale Package (500mm)

- Loading Capacity : 40 kg
- Internal Height : 58 mm
- Color : Mocha
- Setting Possibility : 3D setting possibility (vertical, horizontal, tilt)
- Function : Soft-Close

Unit Price : **$ 49.49** Page: 48

> RollBox Ball Bearing Drawer Set Soft-Close Wholesale Package (500mm)

- Loading Capacity : 30 kg
- Backpanel : 16 mm
- Profile Height : 46 mm
- Color : Metallic Gray
- Function : Soft-Close

Unit Price : **$ 39.09** Page: 68

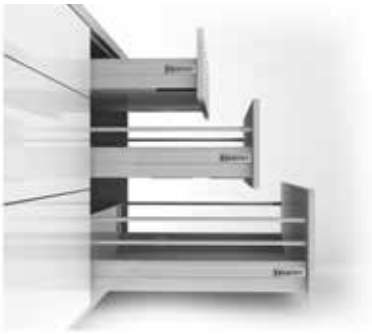

> Smart Box Drawer Without Railing Wholesale Package (500 mm)

- Loading Capacity : 65 kg
- Backpanel : 16 mm
- Color : Gray
- Setting Possibility : ± 2mm vertical and ± 1,5mm horizontal
- Function : Soft-Close

Unit Price : **$ 55.79** Page: 65

> Alphabox Drawer Soft-Close Wholesale Package (500 mm)

- Loading Capacity : 40 kg
- Internal Height : 68 mm
- Color : Anthracite
- Setting Possibility : ± 2mm vertical and ± 1,5mm horizontal
- Function : Soft-Close

Unit Price : **$ 47.99** Page: 60

> Smart Slide FF Full Extension Soft Close Drawer (21")

- Loading Capacity : 30 kg
- Side Panel Thickness : Maximum 16 mm
- Adjustment : + 2mm vertical and ± 1,5mm horizontal
- Function : Soft-Close

Unit Price : **$ 29.63** Page: 78

> Smart Slide Full Extension Soft-Close Drawer (500 mm)

- Loading Capacity : 40 kg
- Side Panel Thickness : Maximum 19 mm
- Adjustment : + 2mm vertical and ± 1,5mm horizontal
- Function : Soft-Close / Push-Open / Push-Open Soft Close

Unit Price : **$ 27.43** Page: 74

* Prices are for soft-close.

> Smart Slide Single Extension Soft-Close Drawer (500 mm)

- Loading Capacity : 30 kg
- Side Panel Thickness : Maximum 19 mm
- Adjustment : + 2mm vertical and ± 1,5mm horizontal
- Function : Soft-Close

Unit Price : **$ 25.53** Page: 72

> SO CLASS Telescopic Slide Systems Full Extension

- Loading Capacity : 30 kg - 45 kg
- Profile Height : 46 mm
- Color Options : Clear Zinc
- Optional Function : Soft-Close, standard

SO CLASS 46 mm Clear Zinc 500 : **$ 19.59** Page: 80
SO CLASS 46 mm Soft-Close Clear Zinc 500 : **$ 13.19** Page: 82

Smartflow Soft-Close Wholesale Package

SMARTFLOW

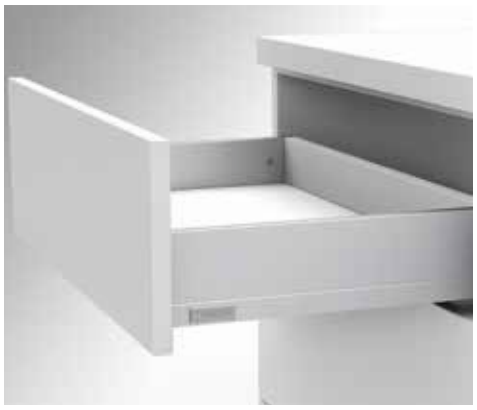

- 12,8 mm ultra thin and elegant side design
- 4 different side heights with gallery railing usage
- Smooth and silent movement technology with improved synchronisation
- 270/ 300/ 350/ 400/ 450/ 500/ 550/ 600 mm drawer lengths
- 3D adjustment opportunity (right-left, up-down and tilt)
- Tool-less front panel assembly
- No cutting process for the base panel
- Full extension & soft close function

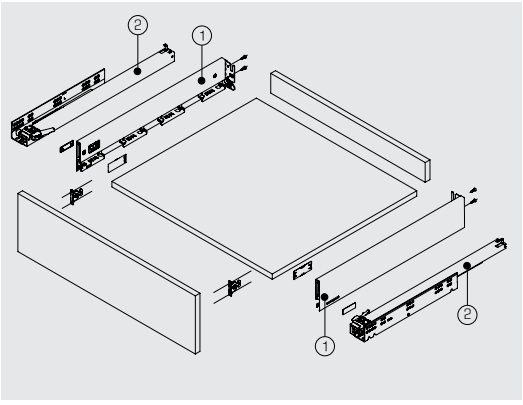

NOMINAL SIZE	58 mm	144 mm	PACKING
270 mm	1271671381**45	1271681381**45	6 Set/ Box
300 mm	1271671382**45	1271681382**45	6 Set/ Box
350 mm	1271671383**45	1271681383**45	6 Set/ Box
400 mm	1271671384**45	1271681384**45	6 Set/ Box
450 mm	1271671385**45	1271681385**45	6 Set/ Box
500 mm	1271671386**45	1271681386**45	6 Set/ Box
550 mm	1271671387**45	1271681387**45	6 Set/ Box
600 mm	1271671388**45	1271681388**45	6 Set/ Box

COLOR (**)	
White	01
Mocha	06
Anthracite	07

Enter the number of your preferred color to the (**) marked area.

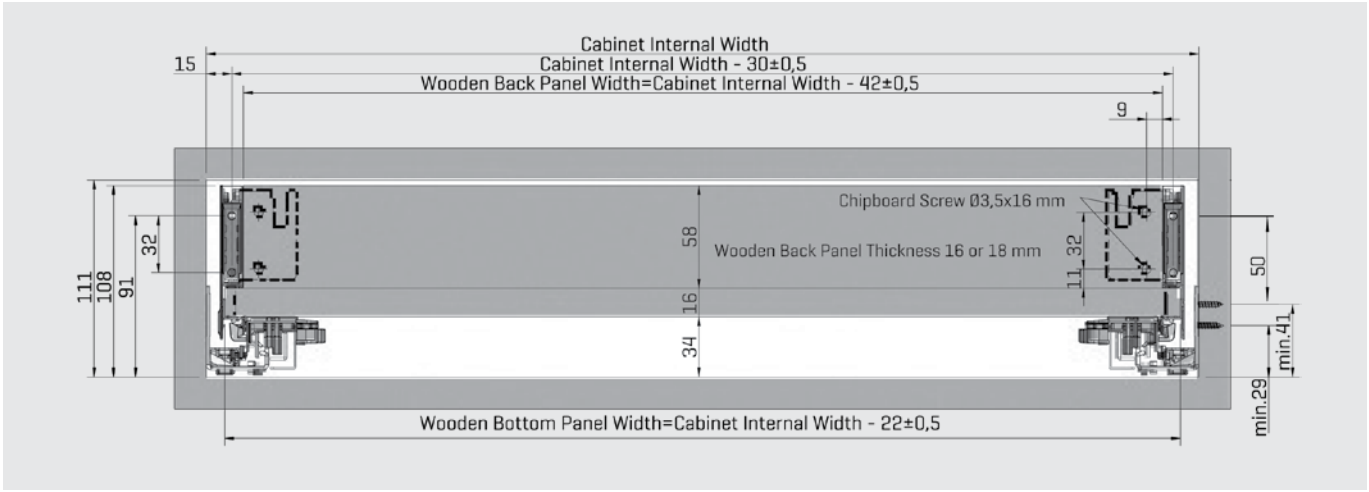

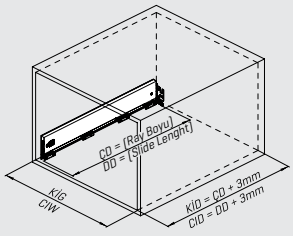

CD Cabinet Depth
CIW Cabinet Internal Width
NS Nominal Size

1. Wooden Drawer Bottom

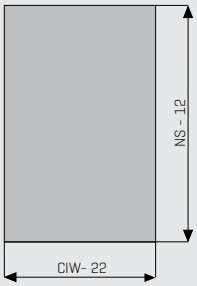

2. Wooden Back Panel

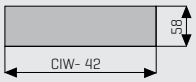

Slide Screw Location

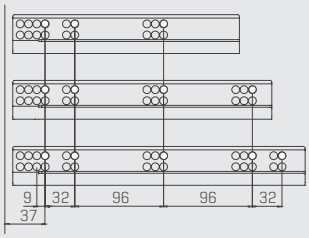

270-300 mm

350-400 mm

450-500
550-600 mm

Recommended Screws For Rail Assembly	
#6 Flat Head Woodscrew	
Euro Screw	

*All dimensions in the graphs above are measured in mm

Smartflow Soft-Close Wholesale Package

SMARTFLOW

NO	CODE	DEFINITION/FEATURE	UNIT PRICE	PACKAGE CONTENT	PACKAGE PRICE	NOTE
1	12716713810145	Height: 58 mm / Length: 270 mm / Bottom Panel Thickness : 16 mm / Color: White	$ 44.49	6 Set	$ 266.94	
2	12716713810645	Height: 58 mm / Length: 270 mm / Bottom Panel Thickness : 16 mm / Color: Mocha	$ 44.49	6 Set	$ 266.94	
3	12716713810745	Height: 58 mm / Length: 270 mm / Bottom Panel Thickness : 16 mm / Color: Anthracite	$ 44.49	6 Set	$ 266.94	
4	12716713820145	Height: 58 mm / Length: 300 mm / Bottom Panel Thickness : 16 mm / Color: White	$ 44.49	6 Set	$ 266.94	
5	12716713820645	Height: 58 mm / Length: 300 mm / Bottom Panel Thickness : 16 mm / Color: Mocha	$ 44.49	6 Set	$ 266.94	
6	12716713820745	Height: 58 mm / Length: 300 mm / Bottom Panel Thickness : 16 mm / Color: Anthracite	$ 44.49	6 Set	$ 266.94	
7	12716713830145	Height: 58 mm / Length: 350 mm / Bottom Panel Thickness : 16 mm / Color: White	$ 45.59	6 Set	$ 273.54	
8	12716713830645	Height: 58 mm / Length: 350 mm / Bottom Panel Thickness : 16 mm / Color: Mocha	$ 45.59	6 Set	$ 273.54	
9	12716713830745	Height: 58 mm / Length: 350 mm / Bottom Panel Thickness : 16 mm / Color: Anthracite	$ 45.59	6 Set	$ 273.54	
10	12716713840145	Height: 58 mm / Length: 400 mm / Bottom Panel Thickness : 16 mm / Color: White	$ 46.59	6 Set	$ 279.54	
11	12716713840645	Height: 58 mm / Length: 400 mm / Bottom Panel Thickness : 16 mm / Color: Mocha	$ 46.59	6 Set	$ 279.54	
12	12716713840745	Height: 58 mm / Length: 400 mm / Bottom Panel Thickness : 16 mm / Color: Anthracite	$ 46.59	6 Set	$ 279.54	
13	12716713850145	Height: 58 mm / Length: 450 mm / Bottom Panel Thickness : 16 mm / Color: White	$ 48.29	6 Set	$ 289.74	
14	12716713850645	Height: 58 mm / Length: 450 mm / Bottom Panel Thickness : 16 mm / Color: Mocha	$ 48.29	6 Set	$ 289.74	
15	12716713850745	Height: 58 mm / Length: 450 mm / Bottom Panel Thickness : 16 mm / Color: Anthracite	$ 48.29	6 Set	$ 289.74	
16	12716713860145	Height: 58 mm / Length: 500 mm / Bottom Panel Thickness : 16 mm / Color: White	$ 49.49	6 Set	$ 296.94	
17	12716713860645	Height: 58 mm / Length: 500 mm / Bottom Panel Thickness : 16 mm / Color: Mocha	$ 49.49	6 Set	$ 296.94	
18	12716713860745	Height: 58 mm / Length: 500 mm / Bottom Panel Thickness : 16 mm / Color: Anthracite	$ 49.49	6 Set	$ 296.94	
19	12716713870145	Height: 58 mm / Length: 550 mm / Bottom Panel Thickness : 16 mm / Color: White	$ 54.79	6 Set	$ 328.74	
20	12716713870645	Height: 58 mm / Length: 550 mm / Bottom Panel Thickness : 16 mm / Color: Mocha	$ 54.79	6 Set	$ 328.74	
21	12716713870745	Height: 58 mm / Length: 550 mm / Bottom Panel Thickness : 16 mm / Color: Anthracite	$ 54.79	6 Set	$ 328.74	
22	12716713880145	Height: 58 mm / Length: 600 mm / Bottom Panel Thickness : 16 mm / Color: White	$ 59.39	6 Set	$ 356.34	
23	12716713880645	Height: 58 mm / Length: 600 mm / Bottom Panel Thickness : 16 mm / Color: Mocha	$ 59.39	6 Set	$ 356.34	
24	12716713880745	Height: 58 mm / Length: 600 mm / Bottom Panel Thickness : 16 mm / Color: Anthracite	$ 59.39	6 Set	$ 356.34	
25	12716813810145	Height: 144 mm / Length: 270 mm / Bottom Panel Thickness : 16 mm / Color: White	$ 53.79	6 Set	$ 322.74	
26	12716813810645	Height: 144 mm / Length: 270 mm / Bottom Panel Thickness : 16 mm / Color: Mocha	$ 53.79	6 Set	$ 322.74	
27	12716813810745	Height: 144 mm / Length: 270 mm / Bottom Panel Thickness : 16 mm / Color: Anthracite	$ 53.79	6 Set	$ 322.74	
28	12716813820145	Height: 144 mm / Length: 300 mm / Bottom Panel Thickness : 16 mm / Color: White	$ 53.79	6 Set	$ 322.74	
29	12716813820645	Height: 144 mm / Length: 300 mm / Bottom Panel Thickness : 16 mm / Color: Mocha	$ 53.79	6 Set	$ 322.74	
30	12716813820745	Height: 144 mm / Length: 300 mm / Bottom Panel Thickness : 16 mm / Color: Anthracite	$ 53.79	6 Set	$ 322.74	
31	12716813830145	Height: 144 mm / Length: 350 mm / Bottom Panel Thickness : 16 mm / Color: White	$ 54.99	6 Set	$ 329.94	
32	12716813830645	Height: 144 mm / Length: 350 mm / Bottom Panel Thickness : 16 mm / Color: Mocha	$ 54.99	6 Set	$ 329.94	
33	12716813830745	Height: 144 mm / Length: 350 mm / Bottom Panel Thickness : 16 mm / Color: Anthracite	$ 54.99	6 Set	$ 329.94	
34	12716813840145	Height: 144 mm / Length: 400 mm / Bottom Panel Thickness : 16 mm / Color: White	$ 56.19	6 Set	$ 337.14	
35	12716813840645	Height: 144 mm / Length: 400 mm / Bottom Panel Thickness : 16 mm / Color: Mocha	$ 56.19	6 Set	$ 337.14	
36	12716813840745	Height: 144 mm / Length: 400 mm / Bottom Panel Thickness : 16 mm / Color: Anthracite	$ 56.19	6 Set	$ 337.14	
37	12716813850145	Height: 144 mm / Length: 450 mm / Bottom Panel Thickness : 16 mm / Color: White	$ 58.19	6 Set	$ 349.14	
38	12716813850645	Height: 144 mm / Length: 450 mm / Bottom Panel Thickness : 16 mm / Color: Mocha	$ 58.19	6 Set	$ 349.14	
39	12716813850745	Height: 144 mm / Length: 450 mm / Bottom Panel Thickness : 16 mm / Color: Anthracite	$ 58.19	6 Set	$ 349.14	
40	12716813860145	Height: 144 mm / Length: 500 mm / Bottom Panel Thickness : 16 mm / Color: White	$ 59.79	6 Set	$ 358.74	
41	12716813860645	Height: 144 mm / Length: 500 mm / Bottom Panel Thickness : 16 mm / Color: Mocha	$ 59.79	6 Set	$ 358.74	
42	12716813860745	Height: 144 mm / Length: 500 mm / Bottom Panel Thickness : 16 mm / Color: Anthracite	$ 59.79	6 Set	$ 358.74	
43	12716813870145	Height: 144 mm / Length: 550 mm / Bottom Panel Thickness : 16 mm / Color: White	$ 65.99	6 Set	$ 395.94	
44	12716813870645	Height: 144 mm / Length: 550 mm / Bottom Panel Thickness : 16 mm / Color: Mocha	$ 65.99	6 Set	$ 395.94	
45	12716813870745	Height: 144 mm / Length: 550 mm / Bottom Panel Thickness : 16 mm / Color: Anthracite	$ 65.99	6 Set	$ 395.94	
46	12716813880145	Height: 144 mm / Length: 600 mm / Bottom Panel Thickness : 16 mm / Color: White	$ 71.59	6 Set	$ 429.54	
47	12716813880645	Height: 144 mm / Length: 600 mm / Bottom Panel Thickness : 16 mm / Color: Mocha	$ 71.59	6 Set	$ 429.54	
48	12716813880745	Height: 144 mm / Length: 600 mm / Bottom Panel Thickness : 16 mm / Color: Anthracite	$ 71.59	6 Set	$ 429.54	

Smartflow Push-Open Soft-Close Wholesale Package

SMARTFLOW

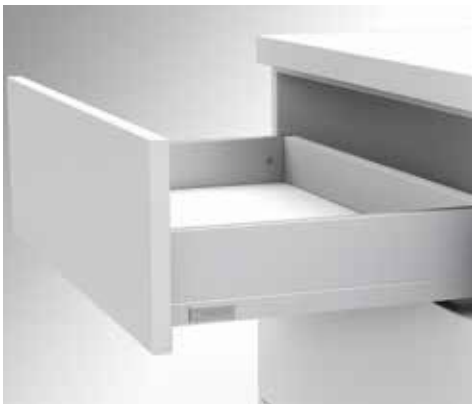

- 12,8 mm ultra thin and elegant side design
- 4 different side heights with gallery railing usage
- Smooth and silent movement technology with improved synchronisation
- 270/ 300/ 350/ 400/ 450/ 500/ 550/ 600 mm drawer lengths
- 3D adjustment opportunity (right-left, up-down and tilt)
- Tool-less front panel assembly
- No cutting process for the base panel
- Full extension & push-open soft-close function

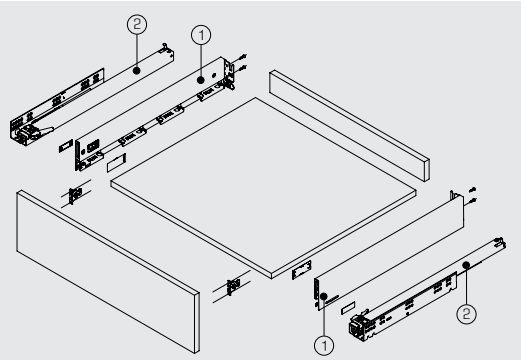

NOMINAL SIZE	58 mm	144 mm	PACKING
270 mm	1271671361**45	1271681361**45	6 Set/ Box
300 mm	1271671362**45	1271681362**45	6 Set/ Box
350 mm	1271671363**45	1271681363**45	6 Set/ Box
400 mm	1271671364**45	1271681364**45	6 Set/ Box
450 mm	1271671365**45	1271681365**45	6 Set/ Box
500 mm	1271671366**45	1271681366**45	6 Set/ Box
550 mm	1271671367**45	1271681367**45	6 Set/ Box
600 mm	1271671368**45	1271681368**45	6 Set/ Box

COLOR (**)	
White	01
Anthracite	07

Enter the number of your preferred color to the (**) marked area.

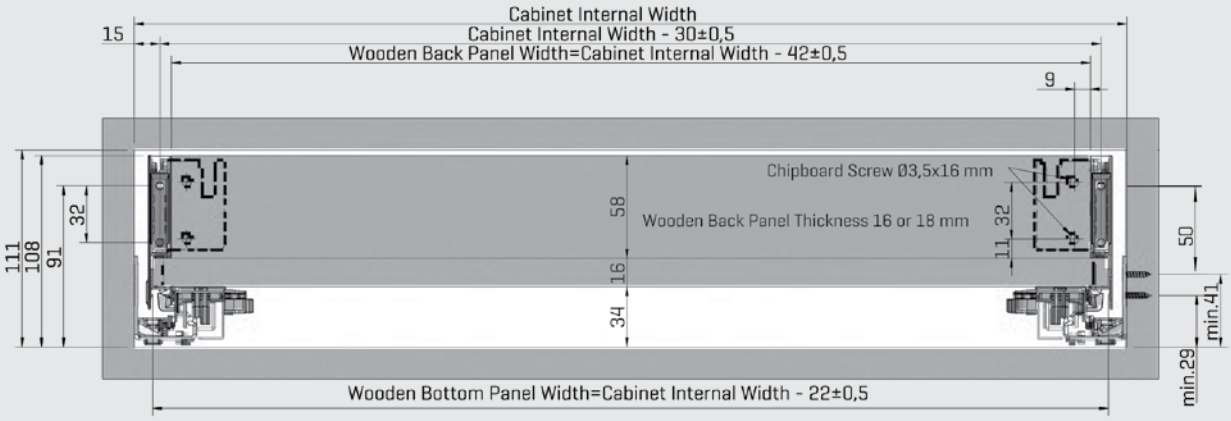

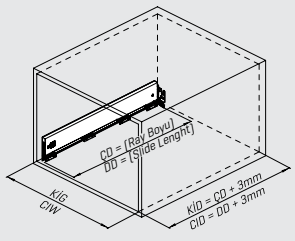

CD Cabinet Depth
CIW Cabinet Internal Width
NS Nominal Size

1. Wooden Drawer Bottom

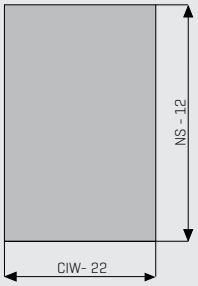

2. Wooden Back Panel

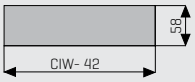

Slide Screw Location

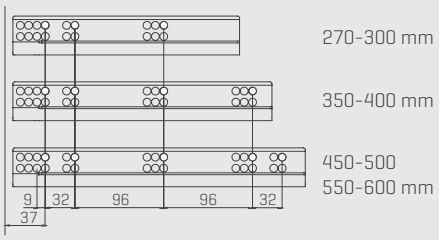

Recommended Screws For Rail Assembly	
#6 Flat Head Woodscrew	
Euro Screw	

*All dimensions in the graphs above are measured in mm

Smartflow Push-Open Soft-Close Wholesale Package

SMARTFLOW

NO	CODE	DEFINITION/FEATURE	UNIT PRICE	PACKAGE CONTENT	PACKAGE PRICE	NOTE
1	12716713630145	Height: 58 mm / Length: 350 mm / Bottom Panel Thickness : 16 mm / Color: White	$ 59.79	6 Set	$ 358.74	
2	12716713630745	Height: 58 mm / Length: 350 mm / Bottom Panel Thickness : 16 mm / Color: Anthracite	$ 59.79	6 Set	$ 358.74	
3	12716713640145	Height: 58 mm / Length: 400 mm / Bottom Panel Thickness : 16 mm / Color: White	$ 60.79	6 Set	$ 364.74	
4	12716713640745	Height: 58 mm / Length: 400 mm / Bottom Panel Thickness : 16 mm / Color: Anthracite	$ 60.79	6 Set	$ 364.74	
5	12716713650145	Height: 58 mm / Length: 450 mm / Bottom Panel Thickness : 16 mm / Color: White	$ 62.39	6 Set	$ 374.34	
6	12716713650745	Height: 58 mm / Length: 450 mm / Bottom Panel Thickness : 16 mm / Color: Anthracite	$ 62.39	6 Set	$ 374.34	
7	12716713660145	Height: 58 mm / Length: 500 mm / Bottom Panel Thickness : 16 mm / Color: White	$ 63.59	6 Set	$ 381.54	
8	12716713660745	Height: 58 mm / Length: 500 mm / Bottom Panel Thickness : 16 mm / Color: Anthracite	$ 63.59	6 Set	$ 381.54	
9	12716713670145	Height: 58 mm / Length: 550 mm / Bottom Panel Thickness : 16 mm / Color: White	$ 68.89	6 Set	$ 413.34	
10	12716713670745	Height: 58 mm / Length: 550 mm / Bottom Panel Thickness : 16 mm / Color: Anthracite	$ 68.89	6 Set	$ 413.34	
11	12716713680145	Height: 58 mm / Length: 600 mm / Bottom Panel Thickness : 16 mm / Color: White	$ 73.69	6 Set	$ 442.14	
12	12716713680745	Height: 58 mm / Length: 600 mm / Bottom Panel Thickness : 16 mm / Color: Anthracite	$ 73.69	6 Set	$ 442.14	
13	12716813630145	Height: 144 mm / Length: 350 mm / Bottom Panel Thickness : 16 mm / Color: White	$ 69.59	6 Set	$ 417.54	
14	12716813630745	Height: 144 mm / Length: 350 mm / Bottom Panel Thickness : 16 mm / Color: Anthracite	$ 69.59	6 Set	$ 417.54	
15	12716813640145	Height: 144 mm / Length: 400 mm / Bottom Panel Thickness : 16 mm / Color: White	$ 70.79	6 Set	$ 424.74	
16	12716813640745	Height: 144 mm / Length: 400 mm / Bottom Panel Thickness : 16 mm / Color: Anthracite	$ 70.79	6 Set	$ 424.74	
17	12716813650145	Height: 144 mm / Length: 450 mm / Bottom Panel Thickness : 16 mm / Color: White	$ 73.79	6 Set	$ 442.74	
18	12716813650745	Height: 144 mm / Length: 450 mm / Bottom Panel Thickness : 16 mm / Color: Anthracite	$ 73.79	6 Set	$ 442.74	
19	12716813660145	Height: 144 mm / Length: 500 mm / Bottom Panel Thickness : 16 mm / Color: White	$ 76.09	6 Set	$ 456.54	
20	12716813660745	Height: 144 mm / Length: 500 mm / Bottom Panel Thickness : 16 mm / Color: Anthracite	$ 76.09	6 Set	$ 456.54	
21	12716813670145	Height: 144 mm / Length: 550 mm / Bottom Panel Thickness : 16 mm / Color: White	$ 79.99	6 Set	$ 479.94	
22	12716813670745	Height: 144 mm / Length: 550 mm / Bottom Panel Thickness : 16 mm / Color: Anthracite	$ 79.99	6 Set	$ 479.94	
23	12716813680145	Height: 144 mm / Length: 600 mm / Bottom Panel Thickness : 16 mm / Color: White	$ 85.79	6 Set	$ 514.74	
24	12716813680745	Height: 144 mm / Length: 600 mm / Bottom Panel Thickness : 16 mm / Color: Anthracite	$ 85.79	6 Set	$ 514.74	

Smartflow Front Connector

NO	CODE	DEFINITION/FEATURE	UNIT PRICE	PACKAGE CONTENT	PACKAGE PRICE	NOTE
1	127964129	H:144 Upper Connector / Ø10 Expandable Dowel	$ 1.259	500 Pcs	$ 629.50	
2	127964125	H:58 & H144 Lower Connector / Ø10 Expandable Dowel	$ 0.349	500 Pcs	$ 174.50	

Smartflow Gallery Railing

SMARTFLOW

- 12,8 mm ultra thin and elegant side design
- 4 different side heights with gallery railing usage
- Smooth and silent movement technology with improved synchronisation
- 270/ 300/ 350/ 400/ 450/ 500/ 550/ 600 mm drawer lengths
- 3D adjustment opportunity (right-left, up-down and tilt)
- Tool-less front panel assembly
- No cutting process for the base panel

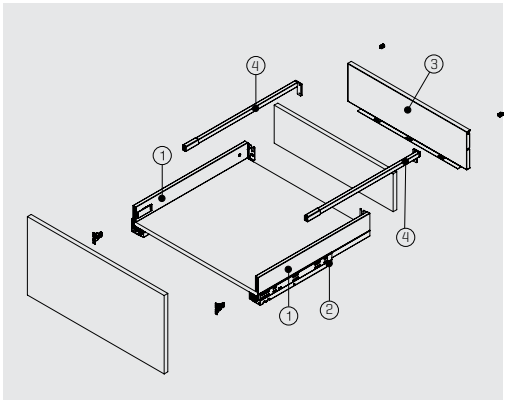

NOMINAL SIZE	WOODEN BACKPANEL	PACKING
270 mm	127961411**	12 Set
300 mm	127961412**	12 Set
350 mm	127961413**	12 Set
400 mm	127961414**	12 Set
450 mm	127961415**	12 Set
500 mm	127961416**	12 Set
550 mm	127961417**	12 Set
600 mm	127961418**	12 Set

COLOR (**)	
White	01
Mocha	06
Anthracite	07

Enter the number of your preferred color to the (**) marked area.

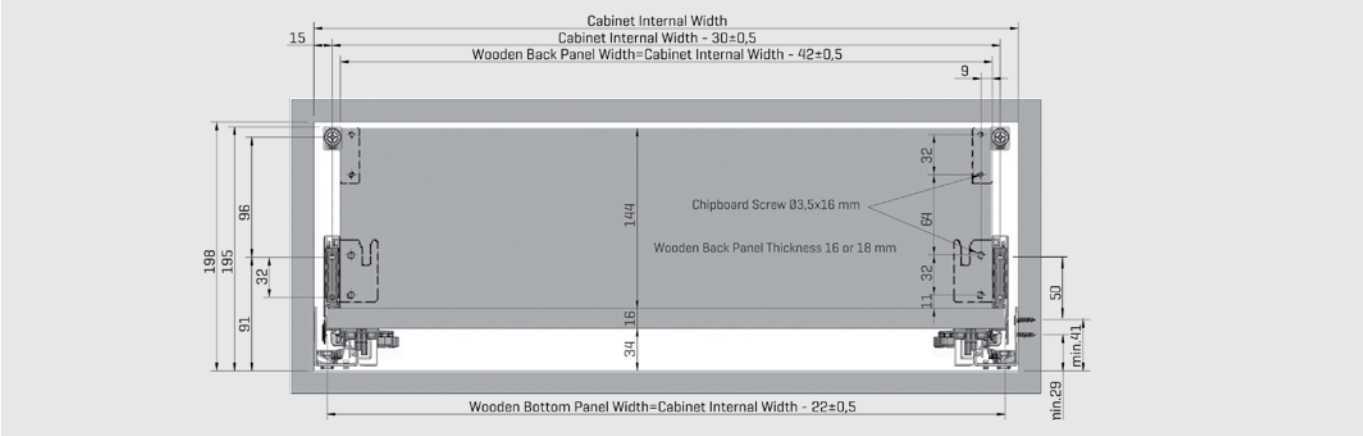

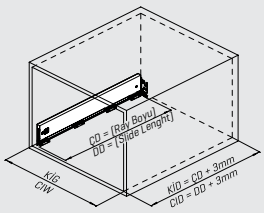

CD Cabinet Depth
CIW Cabinet Internal Width
NS Nominal Size

1. Wooden Drawer Bottom

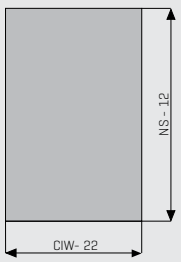

2. Wooden Back Panel

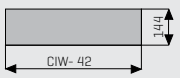

Slide Screw Location

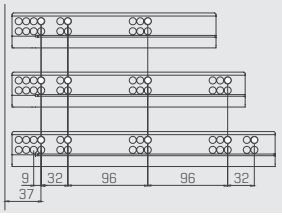

270-300 mm
350-400 mm
450-500
550-600 mm

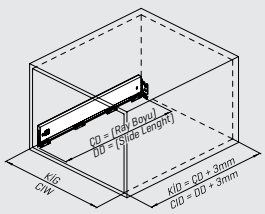

3. Wooden Drawer Bottom

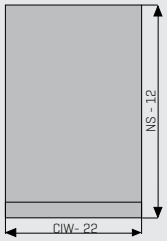

Recommended Screws For Rail Assembly	
#6 Flat Head Woodscrew	
Euro Screw	

*All dimensions in the graphs above are measured in mm

Smartflow Gallery Railing

SMARTFLOW

NO	CODE	DEFINITION/FEATURE	UNIT PRICE	PACKAGE CONTENT	PACKAGE PRICE	NOTE
1	12796141101	Backpanel: Wood / Connection: Screw / Length: 270 mm / Color: White	$ 7.99	12 Set	$ 95.88	
2	12796141106	Backpanel: Wood / Connection: Screw / Length: 270 mm / Color: Mocha	$ 7.99	12 Set	$ 95.88	
3	12796141107	Backpanel: Wood / Connection: Screw / Length: 270 mm / Color: Anthracite	$ 7.99	12 Set	$ 95.88	
4	12796141201	Backpanel: Wood / Connection: Screw / Length: 300 mm / Color: White	$ 7.99	12 Set	$ 95.88	
5	12796141206	Backpanel: Wood / Connection: Screw / Length: 300 mm / Color: Mocha	$ 7.99	12 Set	$ 95.88	
6	12796141207	Backpanel: Wood / Connection: Screw / Length: 300 mm / Color: Anthracite	$ 7.99	12 Set	$ 95.88	
7	12796141301	Backpanel: Wood / Connection: Screw / Length: 350 mm / Color: White	$ 8.39	12 Set	$ 100.68	
8	12796141306	Backpanel: Wood / Connection: Screw / Length: 350 mm / Color: Mocha	$ 8.39	12 Set	$ 100.68	
9	12796141307	Backpanel: Wood / Connection: Screw / Length: 350 mm / Color: Anthracite	$ 8.39	12 Set	$ 100.68	
10	12796141401	Backpanel: Wood / Connection: Screw / Length: 400 mm / Color: White	$ 8.79	12 Set	$ 105.48	
11	12796141406	Backpanel: Wood / Connection: Screw / Length: 400 mm / Color: Mocha	$ 8.79	12 Set	$ 105.48	
12	12796141407	Backpanel: Wood / Connection: Screw / Length: 400 mm / Color: Anthracite	$ 8.79	12 Set	$ 105.48	
13	12796141501	Backpanel: Wood / Connection: Screw / Length: 450 mm / Color: White	$ 9.09	12 Set	$ 109.08	
14	12796141506	Backpanel: Wood / Connection: Screw / Length: 450 mm / Color: Mocha	$ 9.09	12 Set	$ 109.08	
15	12796141507	Backpanel: Wood / Connection: Screw / Length: 450 mm / Color: Anthracite	$ 9.09	12 Set	$ 109.08	
16	12796141601	Backpanel: Wood / Connection: Screw / Length: 500 mm / Color: White	$ 9.49	12 Set	$ 113.88	
17	12796141606	Backpanel: Wood / Connection: Screw / Length: 500 mm / Color: Mocha	$ 9.49	12 Set	$ 113.88	
18	12796141607	Backpanel: Wood / Connection: Screw / Length: 500 mm / Color: Anthracite	$ 9.49	12 Set	$ 113.88	
19	12796141701	Backpanel: Wood / Connection: Screw / Length: 550 mm / Color: White	$ 10.09	12 Set	$ 121.08	
20	12796141706	Backpanel: Wood / Connection: Screw / Length: 550 mm / Color: Mocha	$ 10.09	12 Set	$ 121.08	
21	12796141707	Backpanel: Wood / Connection: Screw / Length: 550 mm / Color: Anthracite	$ 10.09	12 Set	$ 121.08	
22	12796141801	Backpanel: Wood / Connection: Screw / Length: 600 mm / Color: White	$ 10.59	12 Set	$ 127.08	
23	12796141806	Backpanel: Wood / Connection: Screw / Length: 600 mm / Color: Mocha	$ 10.59	12 Set	$ 127.08	
24	12796141807	Backpanel: Wood / Connection: Screw / Length: 600 mm / Color: Anthracite	$ 10.59	12 Set	$ 127.08	

Smartflow Glass Side Panel

SMARTFLOW

- 12,8 mm ultra thin and elegant side design
- 4 different side heights with gallery railing usage
- Smooth and silent movement technology with improved synchronisation
- 270/ 300/ 350/ 400/ 450/ 500/ 550/ 600 mm drawer lengths
- 3D adjustment opportunity (right-left, up-down and tilt)
- Tool-less front panel assembly
- No cutting process for the base panel

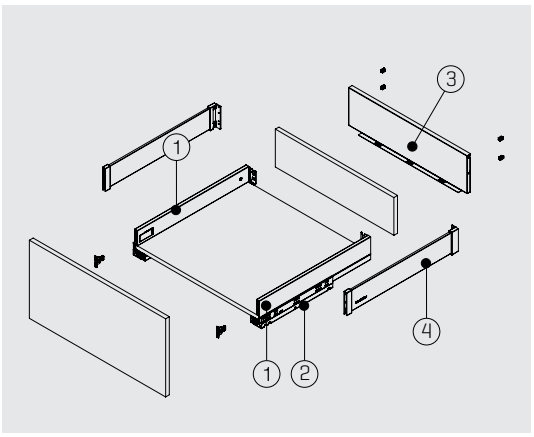

NOMINAL SIZE	CODE	PACKING
270 mm	12796491100**	1 Set
300 mm	12796491200**	1 Set
350 mm	12796491300**	1 Set
400 mm	12796491400**	1 Set
450 mm	12796491500**	1 Set
500 mm	12796491600**	1 Set
550 mm	12796491700**	1 Set
600 mm	12796491800**	1 Set

COLOR (**)	
White	01
Anthracite	07

Enter the number of your preferred color to the (**) marked area.

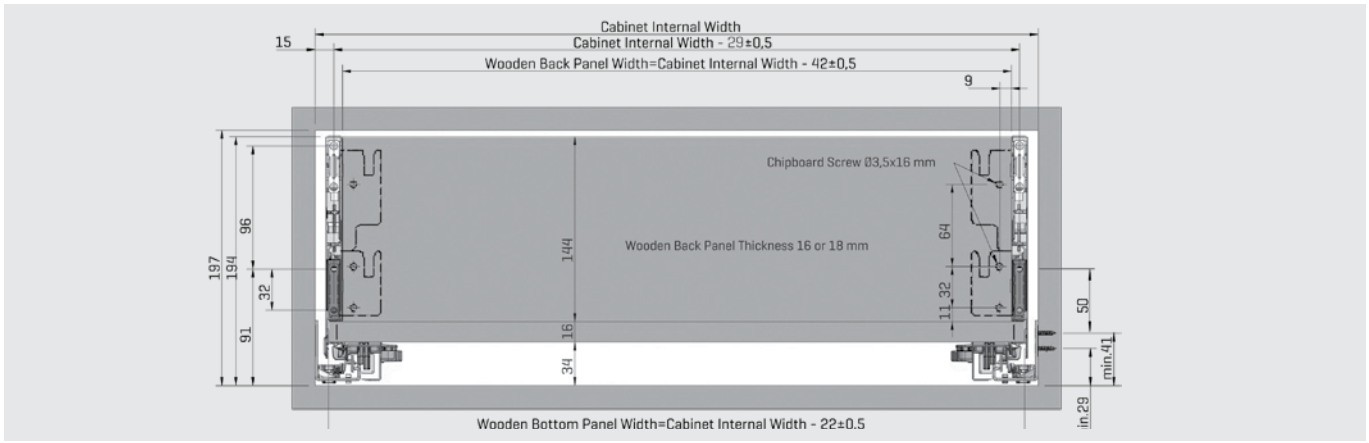

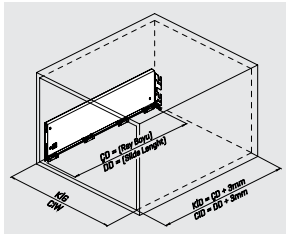

CD Cabinet Depth
CIW Cabinet Internal Width
NS Nominal Size

1. Wooden Drawer Bottom

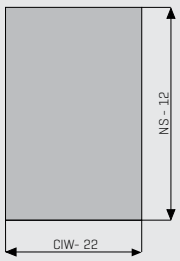

2. Wooden Back Panel

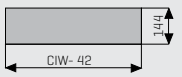

Slide Screw Location

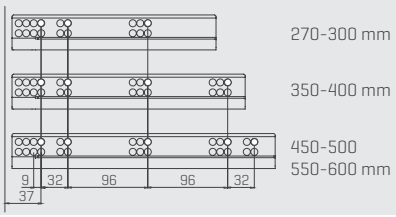

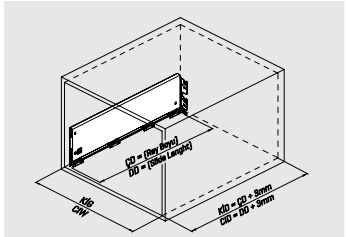

3. Wooden Drawer Bottom

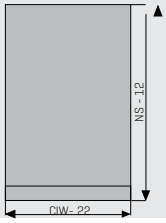

Recommended Screws For Rail Assembly
#6 Flat Head Woodscrew

*All dimensions in the graphs above are measured in mm

Smartflow Glass Side Panel

SMARTFLOW

NO	CODE	DEFINITION/FEATURE	UNIT PRICE	PACKAGE CONTENT	PACKAGE PRICE	NOTE
1	1279649110001	Length: 270 mm / Color: White	$ 16.29	1 Set	$ 16.29	
2	1279649110007	Length: 270 mm / Color: Anthracite	$ 16.29	1 Set	$ 16.29	
3	1279649120001	Length: 300 mm / Color: White	$ 16.29	1 Set	$ 16.29	
4	1279649120007	Length: 300 mm / Color: Anthracite	$ 16.29	1 Set	$ 16.29	
5	1279649130001	Length: 350 mm / Color: White	$ 16.29	1 Set	$ 16.29	
6	1279649130007	Length: 350 mm / Color: Anthracite	$ 16.29	1 Set	$ 16.29	
7	1279649140001	Length: 400 mm / Color: White	$ 16.39	1 Set	$ 16.39	
8	1279649140007	Length: 400 mm / Color: Anthracite	$ 16.39	1 Set	$ 16.39	
9	1279649150001	Length: 450 mm / Color: White	$ 16.59	1 Set	$ 16.59	
10	1279649150007	Length: 450 mm / Color: Anthracite	$ 16.59	1 Set	$ 16.59	
11	1279649160001	Length: 500 mm / Color: White	$ 16.99	1 Set	$ 16.99	
12	1279649160007	Length: 500 mm / Color: Anthracite	$ 16.99	1 Set	$ 16.99	
13	1279649170001	Length: 550 mm / Color: White	$ 18.79	1 Set	$ 18.79	
14	1279649170007	Length: 550 mm / Color: Anthracite	$ 18.79	1 Set	$ 18.79	
15	1279649180001	Length: 600 mm / Color: White	$ 21.69	1 Set	$ 21.69	
16	1279649180007	Length: 600 mm / Color: Anthracite	$ 21.69	1 Set	$ 21.69	

Smartflow In-Box Solutions

SMARTFLOW

· 12,8 mm ultra thin and elegant side design
· 4 different side heights with gallery railing usage
· Smooth and silent movement technology with improved synchronisation
· 270/ 300/ 350/ 400/ 450/ 500/ 550/ 600 mm drawer lengths
· 3D adjustment opportunity (right-left, up-down and tilt)
· Tool-less front panel assembly
· No cutting process for the base panel
. Side gallery railing for H58 with gallery railing are ordered seperatelly

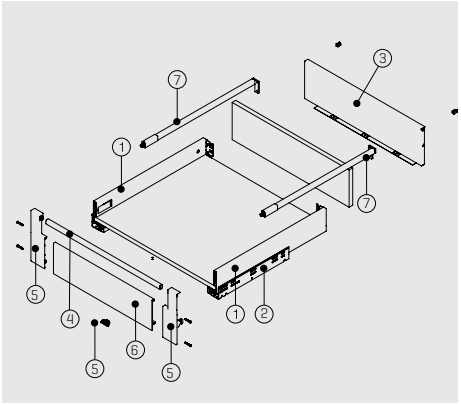

FRONT PANEL HOLDER

CODE	DEFINITION	PACKING
12796470**	H58 In-Box Without Gallery Railing	12 Set

FRONT PANEL HOLDER

CODE	DEFINITION	PACKING
12796471**	Smartflow Front Panel Holder For H58 with Gallery Railing	12 Set

FRONT PANEL HOLDER

CODE	DEFINITION	PACKING
12796472**	H144 In-Box Without Gallery Railing	12 Set

FRONT PANEL

CODE	LENGTH	PACKING
1279646**1044	1044 mm	12 Pcs

Enter the number of your preferred color to the [**] marked area.

FRONT PANEL

CODE	LENGTH	PACKING
12796469**1044	1044 mm	12 Pcs

Enter the number of your preferred color to the [**] marked area.

FRONT PANEL

CODE	LENGTH	PACKING
12796469**1044	1044 mm	12 Pcs

Enter the number of your preferred color to the [**] marked area.

FRONT GALLERY RAILING

CODE	LENGTH	PACKING
1279616**1111	1111 mm	12 Pcs

Enter the number of your preferred color to the [**] marked area.

. Front gallery railing is common for both 12796471** and 12796472**.

COLOR (**)	
White	01
Anthracite	07

Enter the number of your preferred color to the [**] marked area.

Smartflow In-Box Front Panel

SMARTFLOW

NO	CODE	DEFINITION/FEATURE	UNIT PRICE	PACKAGE CONTENT	PACKAGE PRICE	NOTE
1	1279646011044	Length: 1044 / H58 without Gallery Railing / Color: White	$ 33.39	12 Pcs	$ 400.68	
2	1279646071044	Length: 1044 / H58 without Gallery Railing / Color: Anthracite	$ 33.39	12 Pcs	$ 400.68	
3	12796469011044	Length: 1044 / H58-H144 with Gallery Railing / Color: White	$ 33.39	12 Pcs	$ 400.68	
4	12796469071044	Length: 1044 / H58-H144 with Gallery Railing / Color: Anthracite	$ 33.39	12 Pcs	$ 400.68	

Smartflow Front Railing Bar

SMARTFLOW

NO	CODE	DEFINITION/FEATURE	UNIT PRICE	PACKAGE CONTENT	PACKAGE PRICE	NOTE
1	1279616011111	Length: 1111 / Color: White	$ 8.49	12 Pcs	$ 101.88	
2	1279616071111	Length: 1111 / Color: Anthracite	$ 8.49	12 Pcs	$ 101.88	

Smartflow In-Box Front Panel Holders

SMARTFLOW

NO	CODE	DEFINITION/FEATURE	UNIT PRICE	PACKAGE CONTENT	PACKAGE PRICE	NOTE
1	1279647001	H58 / Without Gallery Railing / Color: White	$ 4.059	12 Set	$ 48.71	
2	1279647007	H58 / Without Gallery Railing / Color: Anthracite	$ 4.059	12 Set	$ 48.71	
3	1279647101	H58 / With Gallery Railing / Color: White	$ 4.990	12 Set	$ 59.88	
4	1279647107	H58 / With Gallery Railing / Color: Anthracite	$ 4.990	12 Set	$ 59.88	
5	1279647201	H144 / Without Gallery Railing / Color: White	$ 8.29	12 Set	$ 99.48	
6	1279647207	H144 / Without Gallery Railing / Color: Anthracite	$ 8.29	12 Set	$ 99.48	

Smartflow Drawer Inside Dividing Systems

SMARTFLOW

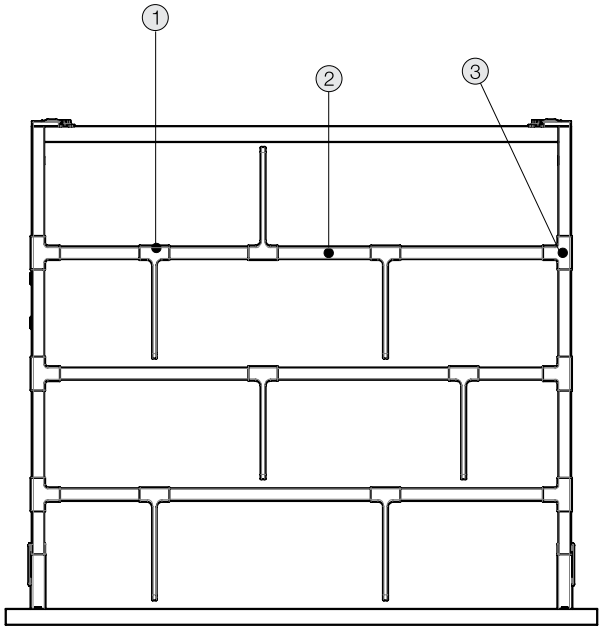

· Adjustable cross dividing and lateral dividers.
· Various color options.
· Easy to remove and position.
. Side gallery railing are ordered seperatelly

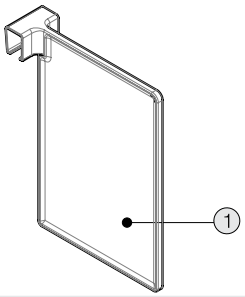

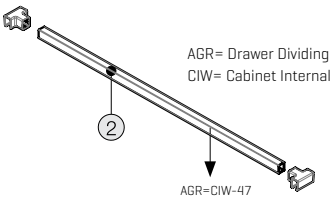

AGR= Drawer Dividing System Bar
CIW= Cabinet Internal Width

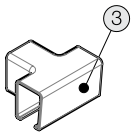

Drawer Inside Dividing Systems

CODE	1	PACKING
12796450**		20 Pcs/ Crt.

COLOR (**)	
White	01
Anthracite	07

Enter the number of your preferred color to the [**] marked area.

Drawer Dividing System Bar

CODE	2	LENGTH	PACKING
1279617**1121		1121 mm	10 Pcs/ Crt.

Calculation Method of Front Gallery Railing: Cut Measurement=Cabinet Internal Width - 47

Adapter for Gallery Railing

CODE	3	PACKING
12796489**		200 Pcs/ Crt.

Smartflow Drawer Dividing System Adapter

SMARTFLOW

NO	CODE	DEFINITION/FEATURE	UNIT PRICE	PACKAGE CONTENT	PACKAGE PRICE	NOTE
1	1279648901	Color: White	$ 0.199	50 Pcs	$ 9.95	
2	1279648907	Color: Anthracite	$ 0.199	50 Pcs	$ 9.95	

Smartflow Drawer Inside Dividing Systems

SMARTFLOW

NO	CODE	DEFINITION/FEATURE	UNIT PRICE	PACKAGE CONTENT	PACKAGE PRICE	NOTE
1	1279645001	Color: White	$ 1.179	20 Pcs	$ 23.58	
2	1279645007	Color: Anthracite	$ 1.179	20 Pcs	$ 23.58	

Smartflow Drawer Dividing System Bar

SMARTFLOW

NO	CODE	DEFINITION/FEATURE	UNIT PRICE	PACKAGE CONTENT	PACKAGE PRICE	NOTE
1	1279617011121	Length: 1121 mm / Color: White	$ 8.39	10 Pcs	$ 83.90	
2	1279617071121	Length: 1121 mm / Color: Anthracite	$ 8.39	10 Pcs	$ 83.90	

Alphabox Soft-Close Wholesale Package

alphabox

- Maximum user comfort inside drawer with thin sided esthetic design
- Customizable and unlimited gallery railing option
- Excellent function with improved synchronisation
- 270/ 300/ 350/ 400/ 450/ 500/ 550/ 600 mm drawer lengths
- Easy mounting and ergonomic adjustment opportunity
- Tool-less front panel assembly
- No cutting process for the base panel
- Full extension & soft close function

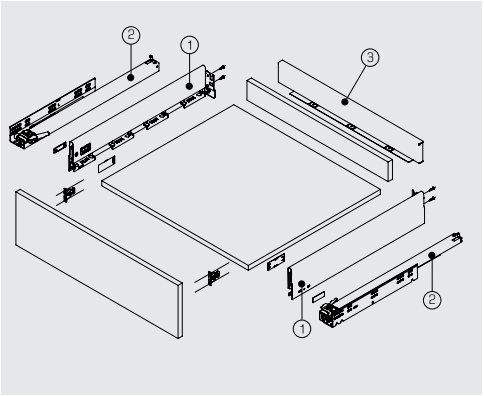

NOMINAL SIZE		PACKING
270 mm	1271773381**45	6 Set/ Box
300 mm	1271773382**45	6 Set/ Box
350 mm	1271773383**45	6 Set/ Box
400 mm	1271773384**45	6 Set/ Box
450 mm	1271773385**45	6 Set/ Box
500 mm	1271773386**45	6 Set/ Box
550 mm	1271773387**45	6 Set/ Box
600 mm	1271773388**45	6 Set/ Box

ALPHABOX FRONT CONNECTOR

CONNECTOR	CODE	DEFINITION	PACKING
Dowel	127974125	Alphabox Front Connector Ø10 Expandable Dowel	500 Pcs

COLOR (**)	
Grey	03

Enter the number of your preferred color to the (**) marked area.

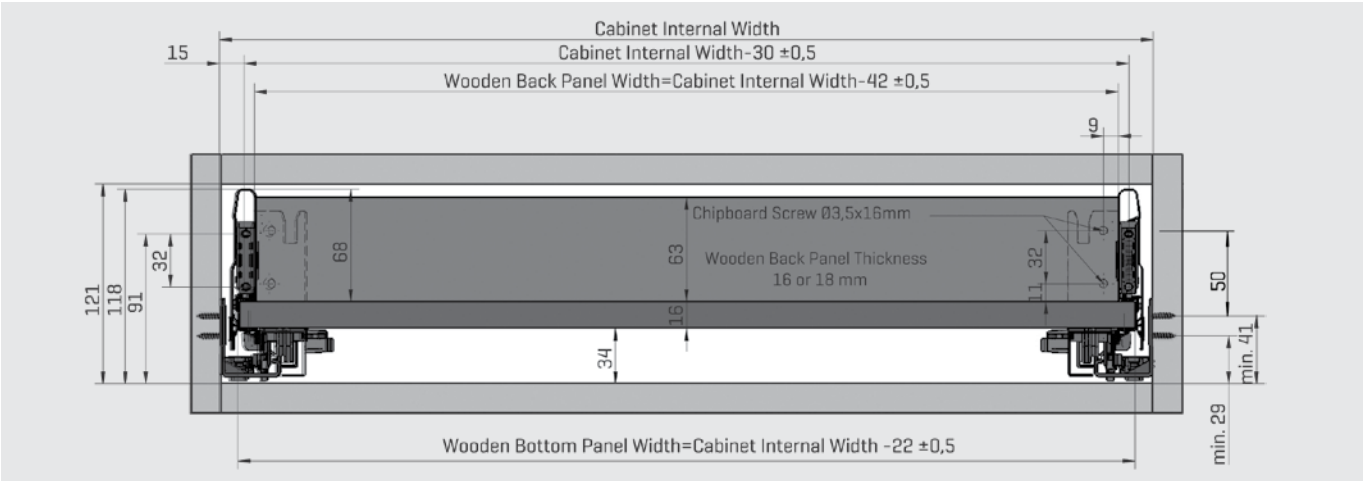

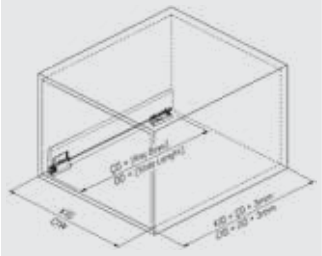

CD Cabinet Depth
CIW Cabinet Internal Width
NS Nominal Size

1. Wooden Drawer Bottom

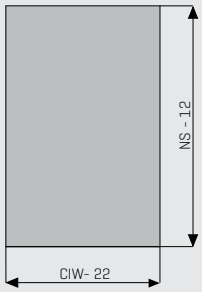

2. Wooden Back Panel

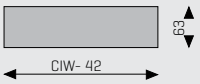

Slide Screw Location

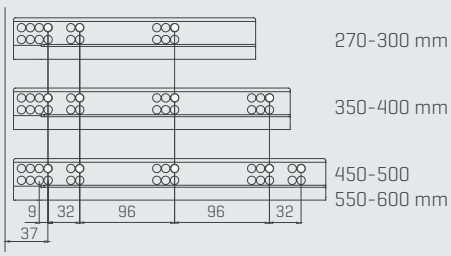

Recommended Screws For Rail Assembly	
#6 Flat Head Woodscrew	
Euro Screw	

*All dimensions in the graphs above are measured in mm

Alphabox Soft-Close Wholesale Package

alphabox

NO	CODE	DEFINITION/FEATURE	UNIT PRICE	PACKAGE CONTENT	PACKAGE PRICE	NOTE
1	12717733810345	Height: 68 mm / Length: 270 mm / Bottom Panel Thickness : 16 mm / Color: Gray	$ 43.19	6 Set	$ 259.14	
2	12717733820345	Height: 68 mm / Length: 300 mm / Bottom Panel Thickness : 16 mm / Color: Gray	$ 43.19	6 Set	$ 259.14	
3	12717733830345	Height: 68 mm / Length: 350 mm / Bottom Panel Thickness : 16 mm / Color: Gray	$ 44.29	6 Set	$ 265.74	
4	12717733840345	Height: 68 mm / Length: 400 mm / Bottom Panel Thickness : 16 mm / Color: Gray	$ 45.19	6 Set	$ 271.14	
5	12717733850345	Height: 68 mm / Length: 450 mm / Bottom Panel Thickness : 16 mm / Color: Gray	$ 46.89	6 Set	$ 281.34	
6	12717733860345	Height: 68 mm / Length: 500 mm / Bottom Panel Thickness : 16 mm / Color: Gray	$ 47.99	6 Set	$ 287.94	
7	12717733870345	Height: 68 mm / Length: 550 mm / Bottom Panel Thickness : 16 mm / Color: Gray	$ 52.99	6 Set	$ 317.94	
8	12717733880345	Height: 68 mm / Length: 600 mm / Bottom Panel Thickness : 16 mm / Color: Gray	$ 57.39	6 Set	$ 344.34	

Alphabox Front Connector

alphabox

NO	CODE	DEFINITION/FEATURE	UNIT PRICE	PACKAGE CONTENT	PACKAGE PRICE	NOTE
1	127974125	Ø10 Expandable Dowel	$ 0.369	500 Pcs	$ 184.50	

Alphabox Gallery Railing

alphabox

- Maximum user comfort inside drawer with thin sided esthetic design
- White, grey colour options
- Customizable and unlimited gallery railing option
- Excellent function with improved synchronisation
- 270/ 300/ 350/ 400/ 450/ 500/ 550/ 600 mm drawer lengths
- Easy mounting and ergonomic adjustment opportunity
- Tool-less front panel assembly
- No cutting process for the base panel
- Full extension & soft close function

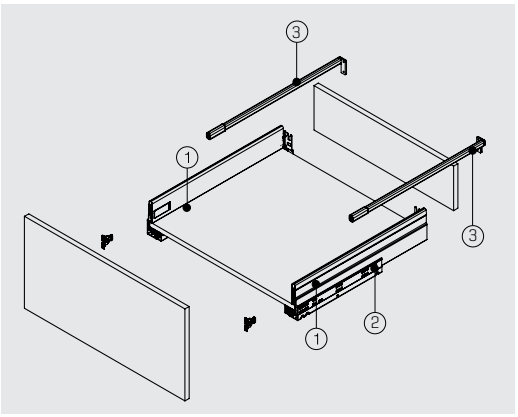

NOMINAL SIZE 3	WOODEN BACK PANEL	PACKING
270 mm	12797141103	12 Set
300 mm	12797141203	12 Set
350 mm	12797141303	12 Set
400 mm	12797141403	12 Set
450 mm	12797141503	12 Set
500 mm	12797141603	12 Set
550 mm	12797141703	12 Set
600 mm	12797141803	12 Set

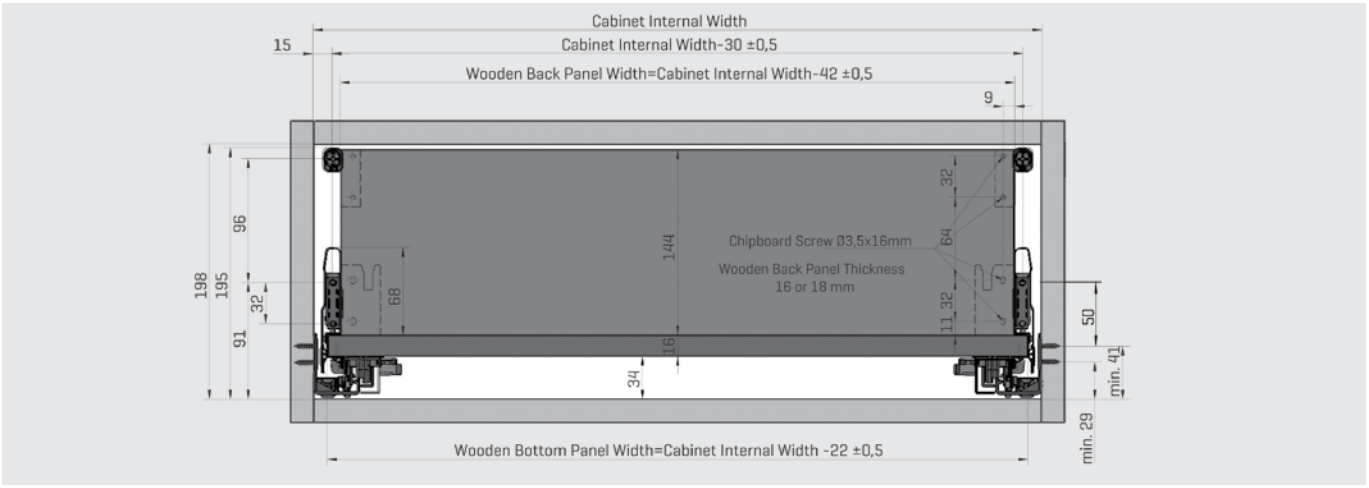

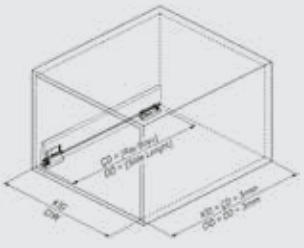

CD Cabinet Depth
CIW Cabinet Internal Width
NS Nominal Size

1. Wooden Drawer Bottom

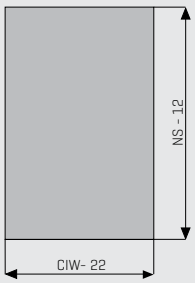

2. Wooden Back Panel

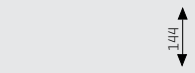

Slide Screw Location

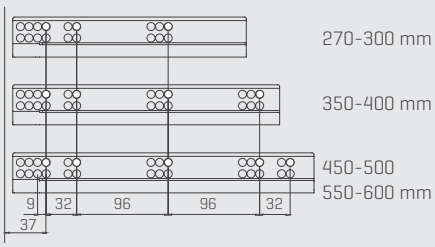

Recommended Screws For Rail Assembly	
#6 Flat Head Woodscrew	
Euro Screw	

*All dimensions in the graphs above are measured in mm

Alphabox Gallery Railing

alphabox

NO	CODE	DEFINITION/FEATURE	UNIT PRICE	PACKAGE CONTENT	PACKAGE PRICE	NOTE
1	12797141103	Backpanel: Wood / Connection: Screw / Length: 270 mm / Color: Gray	$ 7.39	12 Set	$ 88.68	
2	12797141203	Backpanel: Wood / Connection: Screw / Length: 300 mm / Color: Gray	$ 7.39	12 Set	$ 88.68	
3	12797141303	Backpanel: Wood / Connection: Screw / Length: 350 mm / Color: Gray	$ 7.79	12 Set	$ 93.48	
4	12797141403	Backpanel: Wood / Connection: Screw / Length: 400 mm / Color: Gray	$ 8.29	12 Set	$ 99.48	
5	12797141503	Backpanel: Wood / Connection: Screw / Length: 450 mm / Color: Gray	$ 8.69	12 Set	$ 104.28	
6	12797141603	Backpanel: Wood / Connection: Screw / Length: 500 mm / Color: Gray	$ 9.19	12 Set	$ 110.28	
7	12797141703	Backpanel: Wood / Connection: Screw / Length: 550 mm / Color: Gray	$ 9.79	12 Set	$ 117.48	
8	12797141803	Backpanel: Wood / Connection: Screw / Length: 600 mm / Color: Gray	$ 10.49	12 Set	$ 125.88	

Smartflow / Alphabox Tabletop Drawer Assembly Device

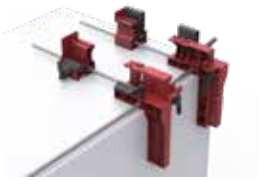

NO	CODE	DEFINITION/FEATURE	UNIT PRICE	PACKAGE CONTENT	PACKAGE PRICE	NOTE
1	136107	Drawer Assembly Device	$ 371.29	1 Set	$ 371.29	

Smartbox Wholesale Package 40 kg

smart box

- Improved soft closing system guarantees smooth running
- Dynamic load capacity: 40 and 65 kg
- ± 2 mm vertical and ± 1,5 mm horizontal adjustment
- Finish: White & Grey
- 68 mm casing height
- Wooden backboard thickness : 16 mm
- Drawer Length for 40 kg: 450/500/550 mm
- Drawer Length for 65 kg: 450/500/550/600/650 mm
- Smart-Click: Tool free assembly and removal of front panel
- Smart-Fit: Simple and tool free assembly, as well as removal of drawer
- The improved stability guarantees a long product durability

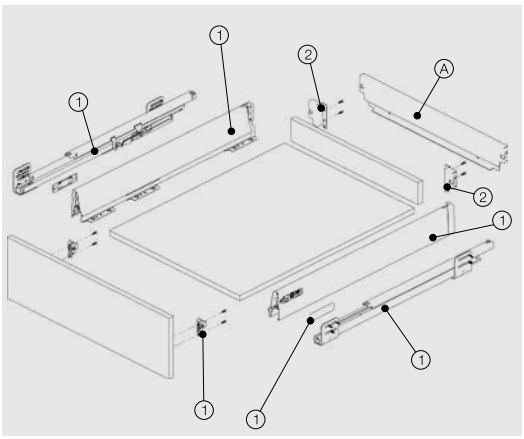

Load Capacity 40 kg	**Smart Box** Wholesale package	
NOMINAL SIZE	CODE	PACKING
450 mm	12714025*	4 Set/Box
500 mm	12714026*	4 Set/Box
550 mm	12714027*	4 Set/Box

Load Capacity 65 kg	Wholesale package	
NOMINAL SIZE	CODE	PACKING
450 mm	12714225*	4 Set/Box
500 mm	12714226*	4 Set/Box
550 mm	12714227*	4 Set/Box
600 mm	12714228*	4 Set/Box
650 mm	12714229*	4 Set/Box

1= White **3**= Grey
Colors can be chosen by adding the number of the color you desire instead of the **(*)** sign.

Backboard Holder
Without Gallery Railings

CODE 16 mm	PACKING
1279181*	4 Set/Box

Wholesale Includes package
-Smart Box Slide Right-Left
-Smart Box Side Right-Left
-Front Connection Panel 2 Pieces
-3,5x18 mm chipboard screw 4 pieces
-Decorative Covers 2 Pieces

Backpanel holders are not included in wholesale package. Please order backpanel holders (2) seperately.

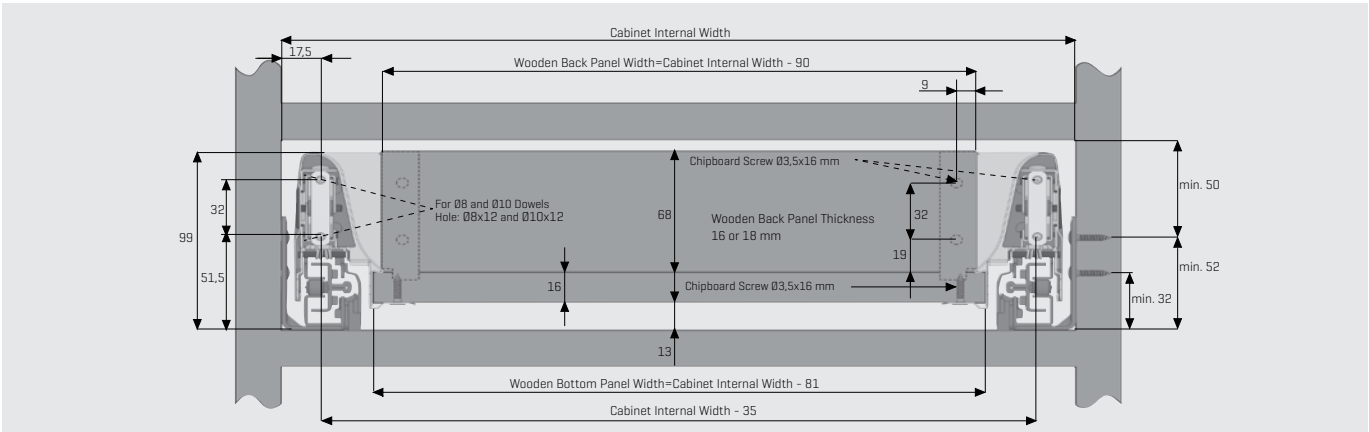

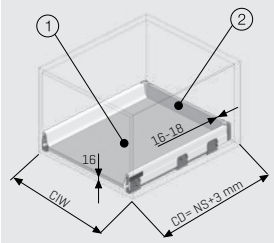

CD Cabinet Depth
CIW Cabinet Internal Width
NS Nominal Size

1. Wooden Drawer Bottom

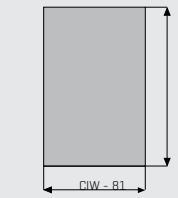

2. Wooden Back Panel

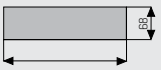

Slide Screw Location

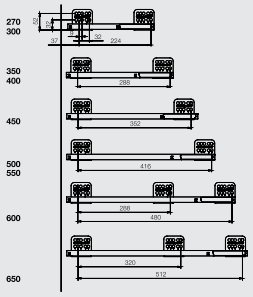

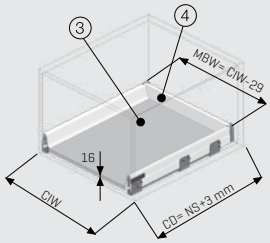

CD Cabinet Depth
CIW Cabinet Internal Width
NS Nominal Size
MBW Metal Back Panel Width

3. Wooden Drawer Bottom

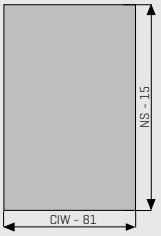

Recommended Screws For Rail Assembly

#6 Flat Head Woodscrew

*All dimensions in the graphs above are measured in mm

Smartbox Wholesale Package 40 kg

NO	CODE	DEFINITION/FEATURE	UNIT PRICE	PACKAGE CONTENT	PACKAGE PRICE	NOTE
1	127140251	Weight: 40kg / Length: 450 mm / Color: White	$ 52.99	4 Set	$ 211.96	
2	127140261	Weight: 40kg / Length: 500 mm / Color: White	$ 54.69	4 Set	$ 218.76	
3	127140271	Weight: 40kg / Length: 550 mm / Color: White	$ 58.69	4 Set	$ 234.76	
4	127140253	Weight: 40kg / Length: 450 mm / Color: Gray	$ 53.89	4 Set	$ 215.56	
5	127140263	Weight: 40kg / Length: 500 mm / Color: Gray	$ 55.79	4 Set	$ 223.16	
6	127140273	Weight: 40kg / Length: 550 mm / Color: Gray	$ 59.69	4 Set	$ 238.76	

Smartbox Backboard Holder Set Package

NO	CODE	DEFINITION/FEATURE	UNIT PRICE	PACKAGE CONTENT	PACKAGE PRICE	NOTE
1	12791811	Backpanel: 16 mm / Without Railing / Color: White	$ 1.939	4 Set	$ 7.76	
2	12791813	Backpanel: 16 mm / Without Railing / Color: Gray	$ 1.939	4 Set	$ 7.76	
3	12791821	Backpanel: 16 mm / Single Railing / Color: White	$ 3.239	4 Set	$ 12.96	
4	12791823	Backpanel: 16 mm / Single Railing / Color: Gray	$ 3.239	4 Set	$ 12.96	

Smartbox Wholesale Package 65 kg

NO	CODE	DEFINITION/FEATURE	UNIT PRICE	PACKAGE CONTENT	PACKAGE PRICE	NOTE
1	127142251	Weight: 65kg / Length: 450 mm / Color: White	$ 64.09	4 Set	$ 256.36	
2	127142261	Weight: 65kg / Length: 500 mm / Color: White	$ 65.99	4 Set	$ 263.96	
3	127142271	Weight: 65kg / Length: 550 mm / Color: White	$ 70.79	4 Set	$ 283.16	
4	127142281	Weight: 65kg / Length: 600 mm / Color: White	$ 75.99	4 Set	$ 303.96	
5	127142291	Weight: 65kg / Length: 650 mm / Color: White	$ 81.49	4 Set	$ 325.96	
6	127142253	Weight: 65kg / Length: 450 mm / Color: Gray	$ 64.89	4 Set	$ 259.56	
7	127142263	Weight: 65kg / Length: 500 mm / Color: Gray	$ 67.29	4 Set	$ 269.16	
8	127142273	Weight: 65kg / Length: 550 mm / Color: Gray	$ 72.09	4 Set	$ 288.36	
9	127142283	Weight: 65kg / Length: 600 mm / Color: Gray	$ 77.09	4 Set	$ 308.36	
10	127142293	Weight: 65kg / Length: 650 mm / Color: Gray	$ 82.99	4 Set	$ 331.96	

Smartbox Gallery Railing

smart box

- Improved soft closing system guarantees smooth running
- Dynamic load capacity: 40 and 65 kg
- ± 2 mm vertical and ± 1,5 mm horizontal adjustment
- Finish: White & Grey
- 68 mm casing height
- Wooden backboard thickness options: 16 mm
- Drawer Length for 40 kg: 450/500/550mm
- Drawer Length for 65 kg: 450/500/550/600/650 mm
- Smart-Click: Tool free assembly and removal of front panel
- Smart-Fit: Simple and tool free assembly, as well as removal of drawer
- The improved stability guarantees a long product durability

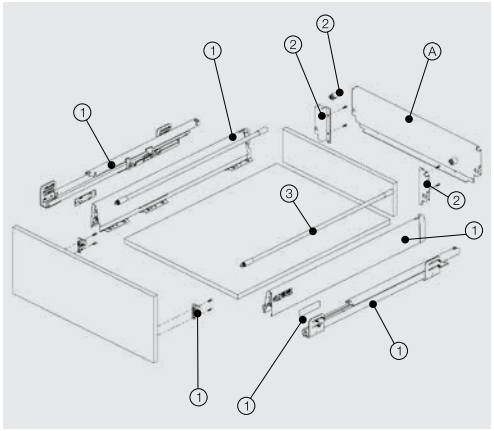

Gallery Railing Bar

		Standard
NOMINAL SIZE	PACKING	CODE
450 mm	20 Set	12790145*
500 mm	20 Set	12790146*
550 mm	20 Set	12790147*

1= White **3**= Grey
Colors can be chosen by adding the number of the color you desire instead of the **(*)** sign.

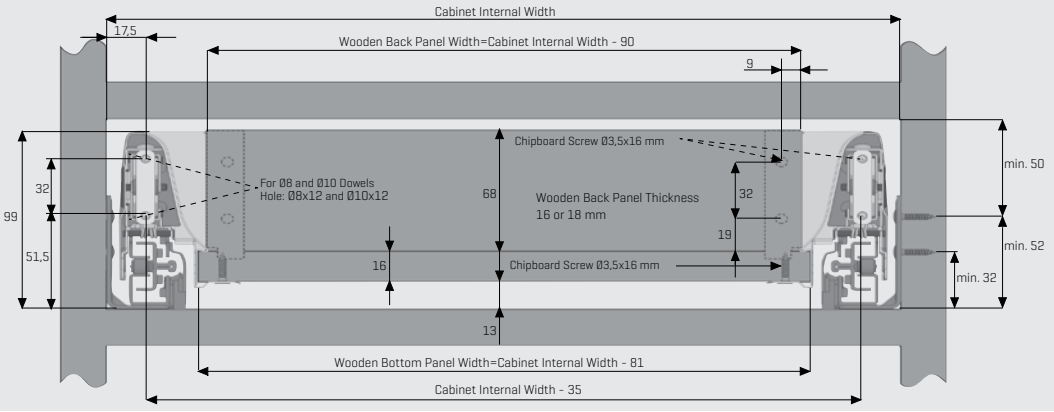

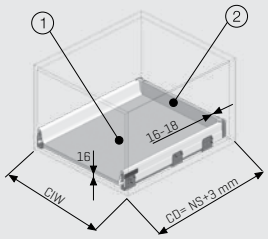

CD Cabinet Depth
CIW Cabinet Internal Width
NS Nominal Size

1. Wooden Drawer Bottom

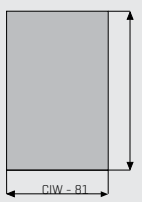

2. Wooden Back Panel

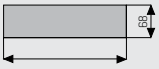

Slide Screw Location

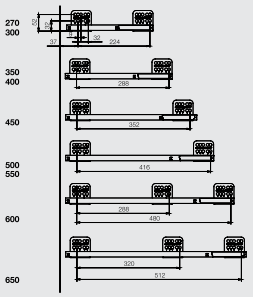

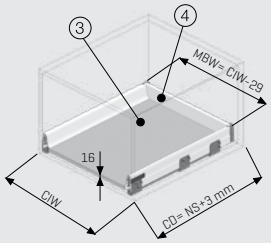

CD Cabinet Depth
CIW Cabinet Internal Width
NS Nominal Size
MBW Metal Back Panel Width

3. Wooden Drawer Bottom

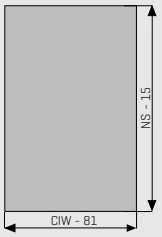

Recommended Screws For Rail Assembly
#6 Flat Head Woodscrew

Easy mounting gallery railings;
They can not be used at In-Box drawer applications.

*All dimensions in the graphs above are measured in mm

Smartbox Gallery Railing

smart box

NO	CODE	DEFINITION/FEATURE	UNIT PRICE	PACKAGE CONTENT	PACKAGE PRICE	NOTE
1	127901451	Connection: Standard / Length: 450 mm / Color: White	$ 5.79	20 Set	$ 115.80	
2	127901461	Connection: Standard / Length: 500 mm / Color: White	$ 6.09	20 Set	$ 121.80	
3	127901471	Connection: Standard / Length: 550 mm / Color: White	$ 6.39	20 Set	$ 127.80	
4	127901453	Connection: Standard / Length: 450 mm / Color: Gray	$ 6.19	20 Set	$ 123.80	
5	127901463	Connection: Standard / Length: 500 mm / Color: Gray	$ 6.49	20 Set	$ 129.80	
6	127901473	Connection: Standard / Length: 550 mm / Color: Gray	$ 6.79	20 Set	$ 135.80	

Smartbox Drawer Front Stabilizer

smart box

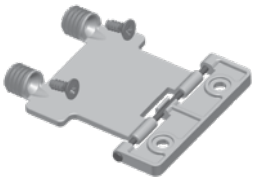

NO	CODE	DEFINITION/FEATURE	UNIT PRICE	PACKAGE CONTENT	PACKAGE PRICE	NOTE
1	12790461	Stabilizer	$ 1.769	250 Pcs	$ 442.25	

Smartbox Front Panel Marking Template

smart box

NO	CODE	DEFINITION/FEATURE	UNIT PRICE	PACKAGE CONTENT	PACKAGE PRICE	NOTE
1	12799908	Marking Template	$ 12.99	10 Set	$ 129.90	

Rollbox Soft-Close Wholesale Package

ROLLBOX

. Ball-bearing slides
. Soft close function
. Full extension slides
. Ultra slim elegant side panels
. Zinc coated slides
. Metallic Gray finish side panels
. Two different side heights (58 mm and 144 mm)
. Front panel adjustment (Up & down and right & left)
. Tool-less assembly and disassembly of front panel
. No cutting process for base panel

NOMINAL SIZE	46 mm / H58	46 mm / H144	PACKING
350 mm	12718719230804	12718819230804	6 Set
400 mm	12718719240804	12718819240804	6 Set
450 mm	12718719250804	12718819250804	6 Set
500 mm	12718719260804	12718819260804	6 Set
550 mm	12718719270804	12718819270804	6 Set

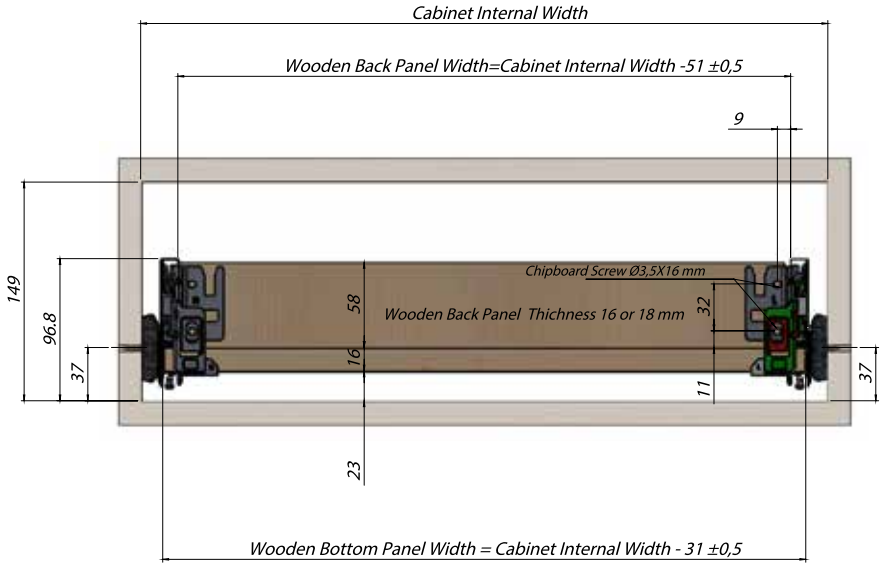

Slide Screw Location

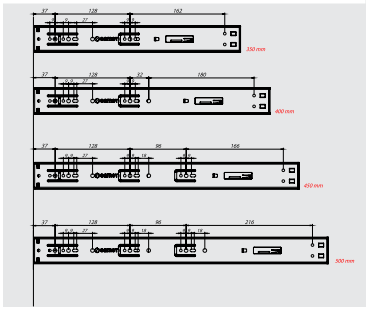

Recommended Screws For Rail Assembly

Ø3,5x16 mm Chipboard Screw

Ø6,1x11,5 mm Euro Screw

Rollbox Soft-Close Wholesale Package

ROLLBOX

NO	CODE	DEFINITION/FEATURE	UNIT PRICE	PACKAGE CONTENT	PACKAGE PRICE	NOTE
1	12718719230804	Height: 58 mm / Length: 350 mm / Bottom Panel Thickness: 16 mm / Slide Height: 46 mm / Color: Metallic Gray	$ 35.19	6 Set	$ 211.14	
2	12718719240804	Height: 58 mm / Length: 400 mm / Bottom Panel Thickness: 16 mm / Slide Height: 46 mm / Color: Metallic Gray	$ 35.89	6 Set	$ 215.34	
3	12718719250804	Height: 58 mm / Length: 450 mm / Bottom Panel Thickness: 16 mm / Slide Height: 46 mm / Color: Metallic Gray	$ 37.79	6 Set	$ 226.74	
4	12718719260804	Height: 58 mm / Length: 500 mm / Bottom Panel Thickness: 16 mm / Slide Height: 46 mm / Color: Metallic Gray	$ 39.09	6 Set	$ 234.54	
5	12718719270804	Height: 58 mm / Length: 550 mm / Bottom Panel Thickness: 16 mm / Slide Height: 46 mm / Color: Metallic Gray	$ 42.59	6 Set	$ 255.54	
6	12718819230804	Height: 144 mm / Length: 350 mm / Bottom Panel Thickness: 16 mm / Slide Height: 46 mm / Color: Metallic Gray	$ 40.79	6 Set	$ 244.74	
7	12718819240804	Height: 144 mm / Length: 400 mm / Bottom Panel Thickness: 16 mm / Slide Height: 46 mm / Color: Metallic Gray	$ 41.69	6 Set	$ 250.14	
8	12718819250804	Height: 144 mm / Length: 450 mm / Bottom Panel Thickness: 16 mm / Slide Height: 46 mm / Color: Metallic Gray	$ 43.69	6 Set	$ 262.14	
9	12718819260804	Height: 144 mm / Length: 500 mm / Bottom Panel Thickness: 16 mm / Slide Height: 46 mm / Color: Metallic Gray	$ 45.19	6 Set	$ 271.14	
10	12718819270804	Height: 144 mm / Length: 550 mm / Bottom Panel Thickness: 16 mm / Slide Height: 46 mm / Color: Metallic Gray	$ 49.29	6 Set	$ 295.74	

Smartflow / Alphabox / Rollbox / Rawbox Marking Template

NO	CODE	DEFINITION/FEATURE	UNIT PRICE	PACKAGE CONTENT	PACKAGE PRICE	NOTE
1	12799928	Marking Template	$ 20.89	6 Set	$ 125.34	

Rawbox Soft-Close Wholesale Package

RAWBOX

. Ball-bearing slides
. Soft close function
. Full extension slides
. Ultra slim elegant side panels
. Galvanized coated side panels and slides
. Two different side heights (58 mm and 144 mm)
. Front panel adjustment (Up & down and right & left)
. Tool-less assembly and disassembly of front panel
. No cutting process for base panel

NOMINAL SIZE	46 mm / H58	46 mm / H144	PACKING
350 mm	12719719230804	12719819230804	6 Set
400 mm	12719719240804	12719819240804	6 Set
450 mm	12719719250804	12719819250804	6 Set
500 mm	12719719260804	12719819260804	6 Set
550 mm	12719719270804	12719819270804	6 Set

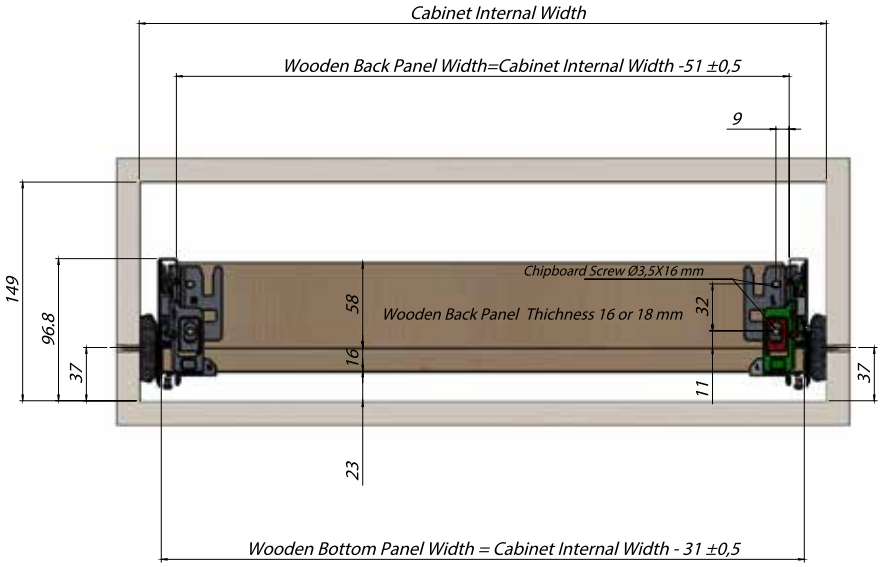

Slide Screw Location

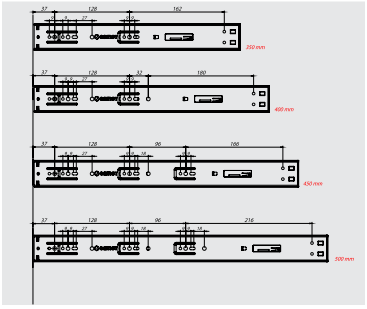

Recommended Screws For Rail Assembly

Ø3,5x16 mm Chipboard Screw

Ø6,1x11,5 mm Euro Screw

Rawbox Soft-Close Wholesale Package

RAWBOX

NO	CODE	DEFINITION/FEATURE	UNIT PRICE	PACKAGE CONTENT	PACKAGE PRICE	NOTE
1	12719719230804	Height: 58 mm / Length: 350 mm / Bottom Panel Thickness: 16 mm / Slide Height: 46 mm / Galvanized	$ 33.29	6 Set	$ 199.74	
2	12719719240804	Height: 58 mm / Length: 400 mm / Bottom Panel Thickness: 16 mm / Slide Height: 46 mm / Galvanized	$ 34.29	6 Set	$ 205.74	
3	12719719250804	Height: 58 mm / Length: 450 mm / Bottom Panel Thickness: 16 mm / Slide Height: 46 mm / Galvanized	$ 35.89	6 Set	$ 215.34	
4	12719719260804	Height: 58 mm / Length: 500 mm / Bottom Panel Thickness: 16 mm / Slide Height: 46 mm / Galvanized	$ 37.19	6 Set	$ 223.14	
5	12719719270804	Height: 58 mm / Length: 550 mm / Bottom Panel Thickness: 16 mm / Slide Height: 46 mm / Galvanized	$ 40.59	6 Set	$ 243.54	
6	12719819230804	Height: 144 mm / Length: 350 mm / Bottom Panel Thickness: 16 mm / Slide Height: 46 mm / Galvanized	$ 38.89	6 Set	$ 233.34	
7	12719819240804	Height: 144 mm / Length: 400 mm / Bottom Panel Thickness: 16 mm / Slide Height: 46 mm / Galvanized	$ 39.59	6 Set	$ 237.54	
8	12719819250804	Height: 144 mm / Length: 450 mm / Bottom Panel Thickness: 16 mm / Slide Height: 46 mm / Galvanized	$ 41.69	6 Set	$ 250.14	
9	12719819260804	Height: 144 mm / Length: 500 mm / Bottom Panel Thickness: 16 mm / Slide Height: 46 mm / Galvanized	$ 43.19	6 Set	$ 259.14	
10	12719819270804	Height: 144 mm / Length: 550 mm / Bottom Panel Thickness: 16 mm / Slide Height: 46 mm / Galvanized	$ 47.09	6 Set	$ 282.54	

Smart Slide Single Extension Soft Close Lock-Fix

smart slide

- Concealed, single extension wooden drawer slide
- Soft close System guarantees silent and gentle closing
- Easy removal and mounting permitted by SmartLock®
- The SmartLock® System provides a ±1,5 mm horizontal and +2 mm upwards adjustment opportunity.
- Dynamic load capacity: 30 kg/ 66 lb
- Maximum up to 19 mm wooden side application
- Drawer Length alternatives: 450/500/550
- The improved stability guarantees a long product durability
- Same cabinet and drawer can be used with both Smart Slide® Full Extension® and Smart Slide Single Extension

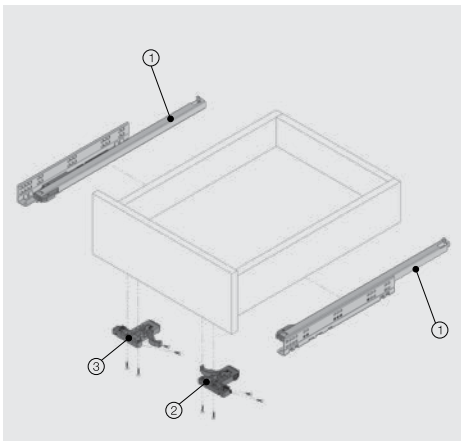

	Smart Slide Drawer Slide Right-Left	
NOMINAL SIZE	CODE	PACKING
450 mm	127221305	12 Set
500 mm	127221306	12 Set
550 mm	127221307	12 Set

	SmartLock® Right-Left	
CODE Right	CODE Left	PACKING
12790773	12790774	120 Pcs

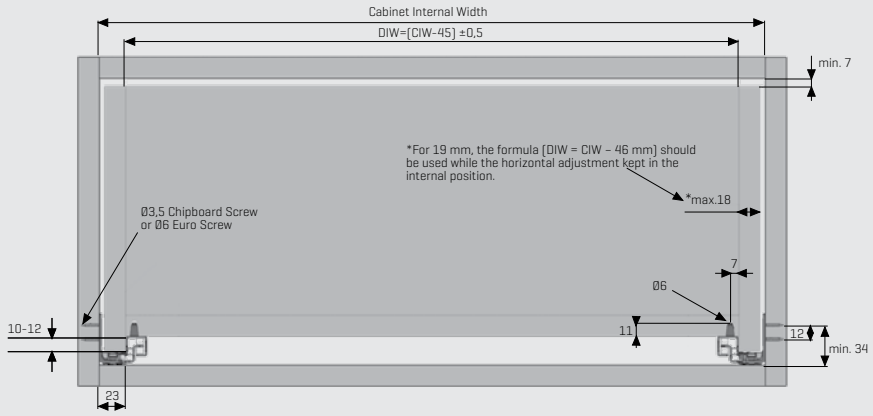

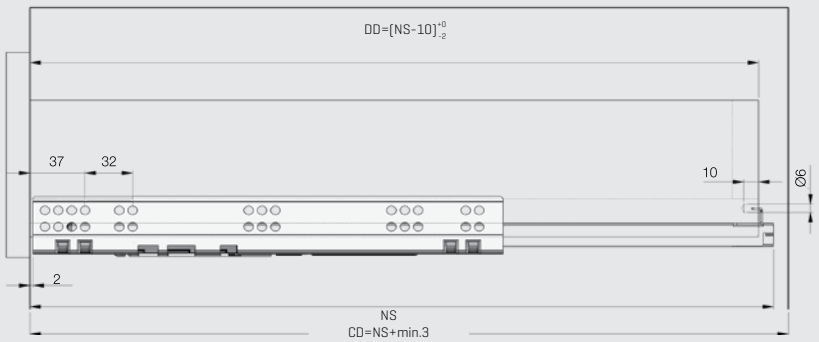

Slide Screw Location

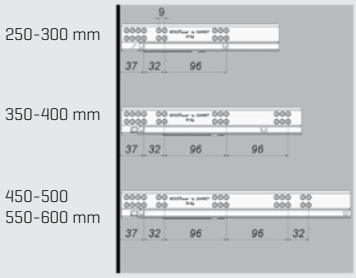

CD	Cabinet Depth
CIW	Cabinet Internal Width
NS	Nominal Size
DIW	Drawer Internal Width
DD	Drawer Depth

*All dimensions in the graphs above are measured in mm

Recommended Screws For Rail Assembly	
#6 Flat Head Woodscrew	
Euro Screw	

Smart Slide Single Extension Soft Close Lock-Fix

smart slide

NO	CODE	DEFINITION/FEATURE	UNIT PRICE	PACKAGE CONTENT	PACKAGE PRICE	NOTE
1	127221305	Length: 450 mm	$ 22.69	12 Set	$ 272.28	
2	127221306	Length: 500 mm	$ 23.09	12 Set	$ 277.08	
3	127221307	Length: 550 mm	$ 24.39	12 Set	$ 292.68	

Smart Slide Lock

smart slide

NO	CODE	DEFINITION/FEATURE	UNIT PRICE	PACKAGE CONTENT	PACKAGE PRICE	NOTE
1	12790773	Right / 2D	$ 1.219	120 Pcs	$ 146.28	
2	12790774	Left / 2D	$ 1.219	120 Pcs	$ 146.28	

Smart Slide Full Extension Synchronization Soft Close Lock-Fix

smart slide | full

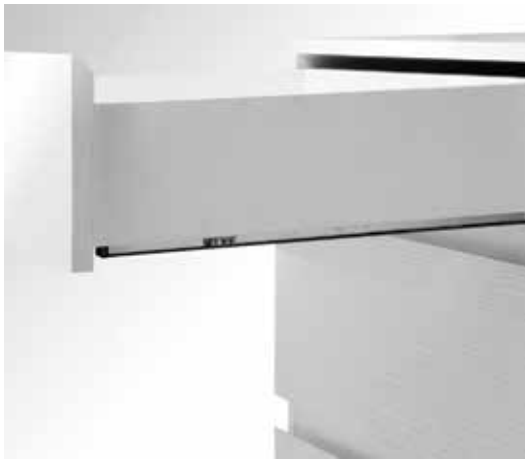

- Concealed, full extension wooden drawer slide
- Soft close System guarantees silent and gentle closing
- Easy removal and mounting permitted by SmartLock®
- The SmartLock® System provides a ±1,5 mm horizontal and +2 mm upwards adjustment opportunity.
- Dynamic load capacity: 40 kg / 88 lb
- Maximum up to 19 mm wooden side application
- Drawer Length alternatives: 250/300/350/400/450/500/550/600 mm
- The improved stability guarantees a long product durability
- Same cabinet and drawer can be used with both Smart Slide® Full Extension® and Smart Slide Single Extension

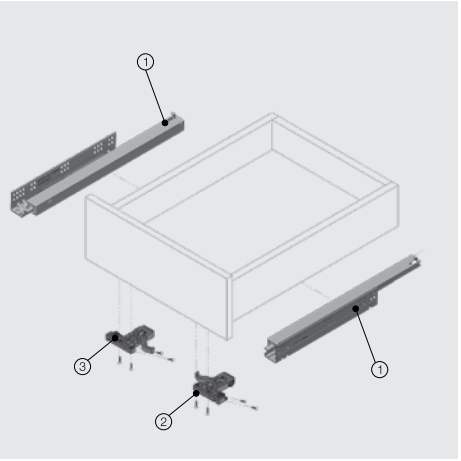

Smart Slide Drawer Slide
Right-Left

NOMINAL SIZE	CODE	PACKING
250 mm	127240231	6 Set
300 mm	127240232	6 Set
350 mm	127240233	6 Set
400 mm	127240234	6 Set
450 mm	127240235	6 Set
500 mm	127240236	6 Set
550 mm	127240237	6 Set
600 mm	127240238	6 Set

SmartLock®
Right-Left

CODE Right	CODE Left	PACKING
12790773	12790774	120 Pcs

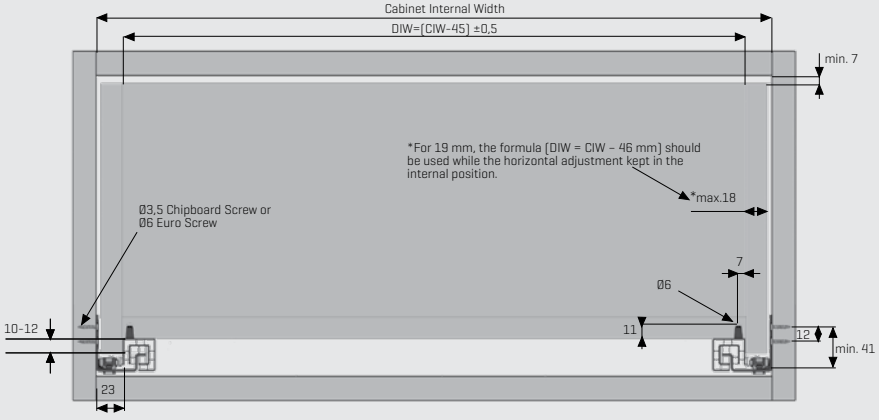

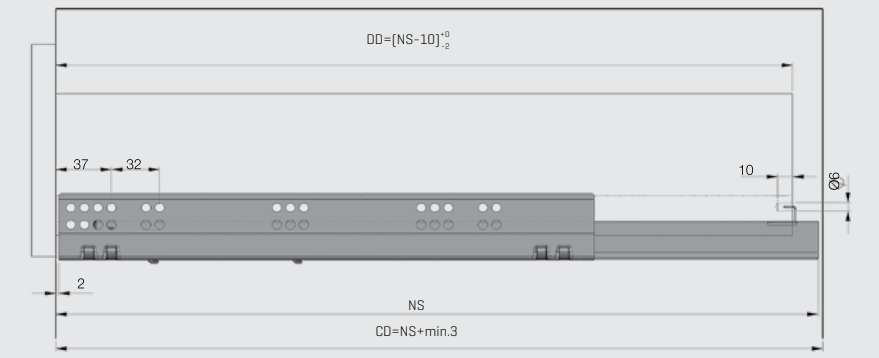

Slide Screw Location

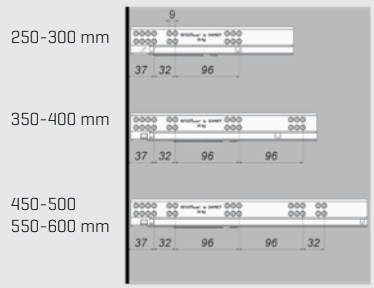

CD	Cabinet Depth
CIW	Cabinet Internal Width
NS	Nominal Size
DIW	Drawer Internal Width
DD	Drawer Depth

*All dimensions in the graphs above are measured in mm

Recommended Screws For Rail Assembly

#6 Flat Head Woodscrew	
Euro Screw	

Smart Slide Full Extension Synchronization Soft Close Lock-Fix

smart slide full

NO	CODE	DEFINITION/FEATURE	UNIT PRICE	PACKAGE CONTENT	PACKAGE PRICE	NOTE
1	127240231	Length: 250 mm	$ 23.59	6 Set	$ 141.54	
2	127240232	Length: 300 mm	$ 23.59	6 Set	$ 141.54	
3	127240233	Length: 350 mm	$ 23.59	6 Set	$ 141.54	
4	127240234	Length: 400 mm	$ 23.99	6 Set	$ 143.94	
5	127240235	Length: 450 mm	$ 24.69	6 Set	$ 148.14	
6	127240236	Length: 500 mm	$ 24.99	6 Set	$ 149.94	
7	127240237	Length: 550 mm	$ 26.39	6 Set	$ 158.34	
8	127240238	Length: 600 mm	$ 29.79	6 Set	$ 178.74	

Smart Slide Lock

smart slide

NO	CODE	DEFINITION/FEATURE	UNIT PRICE	PACKAGE CONTENT	PACKAGE PRICE	NOTE
1	12790773	Right / 2D	$ 1.219	120 Pcs	$ 146.28	
2	12790774	Left / 2D	$ 1.219	120 Pcs	$ 146.28	

Smart Slide Full Extension Synchronization Push-Open Soft Close Lock-Fix

smart slide full

- Concealed, full extension wooden drawer slide.
- Soft close System guarantees silent and gentle closing.
- Easy removal and mounting permitted by SmartLock®
- The SmartLock® System provides a ±1,5 mm horizontal and +2 mm upwards adjustment opportunity.
- Dynamic load capacity: 40 kg / 88 lb
- Maximum up to 19 mm wooden side application
- Drawer Length alternatives: 350/400/450/500/550mm
- The improved stability guarantees a long product durability

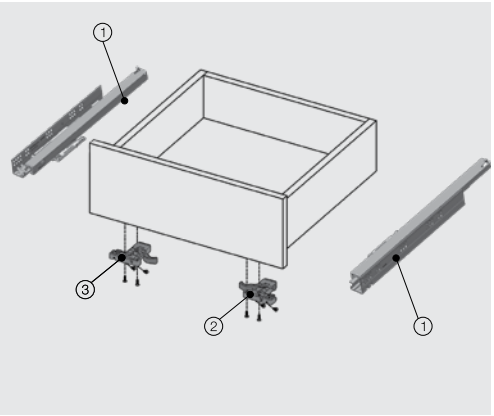

Smart Slide Drawer Slide
Right-Left

NOMINAL SIZE	CODE	PACKING
350 mm	127230303	6 Set
400 mm	127230304	6 Set
450 mm	127230305	6 Set
500 mm	127230306	6 Set
550 mm	127230307	6 Set

SmartLock® System
Right-Left

CODE Right	CODE Left	PACKING
12790773	12790774	120 Pcs

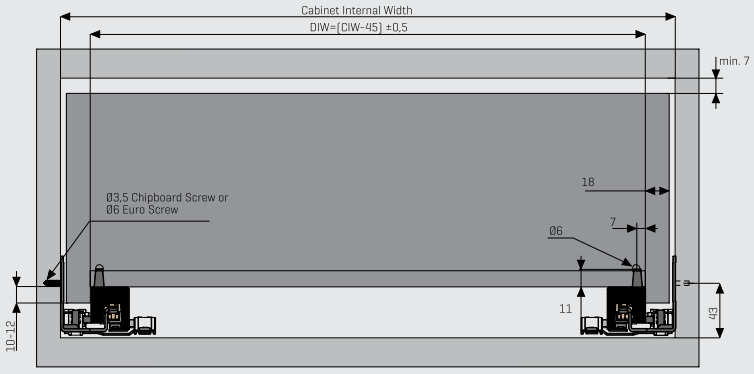

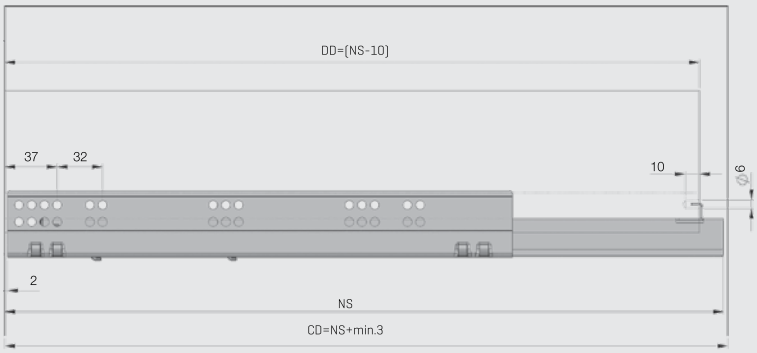

Slide Screw Location

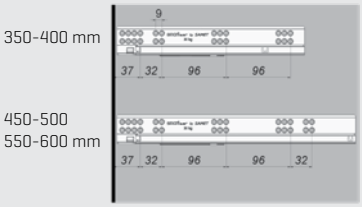

CD	Cabinet Depth
CIW	Cabinet Internal Width
NS	Nominal Size
DIW	Drawer Internal Width
DD	Drawer Depth

*All dimensions in the graphs above are measured in mm

Recommended Screws For Rail Assembly	
#6 Flat Head Woodscrew	
Euro Screw	

Smart Slide Full Extension Synchronization Push-Open Soft Close Lock-Fix

smart slide full

NO	CODE	DEFINITION/FEATURE	UNIT PRICE	PACKAGE CONTENT	PACKAGE PRICE	NOTE
1	127230303	Length: 350 mm	$ 38.19	6 Set	$ 229.14	
2	127230304	Length: 400 mm	$ 38.79	6 Set	$ 232.74	
3	127230305	Length: 450 mm	$ 39.69	6 Set	$ 238.14	
4	127230306	Length: 500 mm	$ 40.49	6 Set	$ 242.94	
5	127230307	Length: 550 mm	$ 42.49	6 Set	$ 254.94	

Smart Slide Lock

smart slide

NO	CODE	DEFINITION/FEATURE	UNIT PRICE	PACKAGE CONTENT	PACKAGE PRICE	NOTE
1	12790773	Right / 2D	$ 1.219	120 Pcs	$ 146.28	
2	12790774	Left / 2D	$ 1.219	120 Pcs	$ 146.28	

Smart Slide Distance Bracket for In-Box applications

smart slide

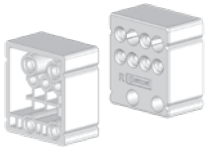

NO	CODE	DEFINITION/FEATURE	UNIT PRICE	PACKAGE CONTENT	PACKAGE PRICE	NOTE
1	12790761	Length: 25 mm / Right / Color: Gray	$ 1.039	50 Pcs	$ 51.95	
2	12790762	Length: 25 mm / Left / Color: Gray	$ 1.039	50 Pcs	$ 51.95	

Smart Slide Drilling Jig

smart slide

NO	CODE	DEFINITION/FEATURE	UNIT PRICE	PACKAGE CONTENT	PACKAGE PRICE	NOTE
1	12799902	Portable Drilling Jig	$ 121.59	1 Set	$ 121.59	

NO	CODE	DEFINITION/FEATURE	UNIT PRICE	PACKAGE CONTENT	PACKAGE PRICE	NOTE
1	12799903	Drilling Jig for Locking Device	$ 24.29	10 Set	$ 242.90	

Smart Slide FF Full Extension Synchronization Soft Close Lock-Fix

smart slide FACE FRAME

- Concealed, full extension woodendrawer slide.
- Soft close System guarantees silent and gentle closing.
- Easy removal and mounting permitted by Smart Slide 2D Lock®
- The Smart Slide 2D Lock® System provides a ±1,5 mm horizontal and +2 mm upwards adjustment opportunity.
- Dynamic load capacity: 30 kg/ 66 lb
- Maximum up to 16 mm wooden side application
- Drawer Length alternatives: 12" , 15", 18" , 21"
- The improved stability guarantees a long product durability

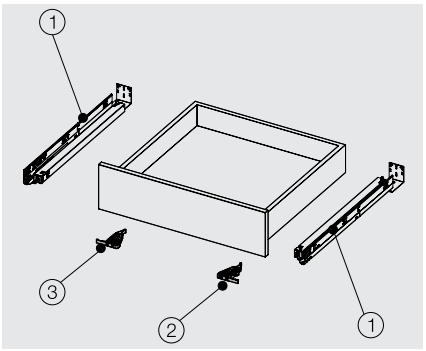

2-D Adjustable Lock System for Slides.

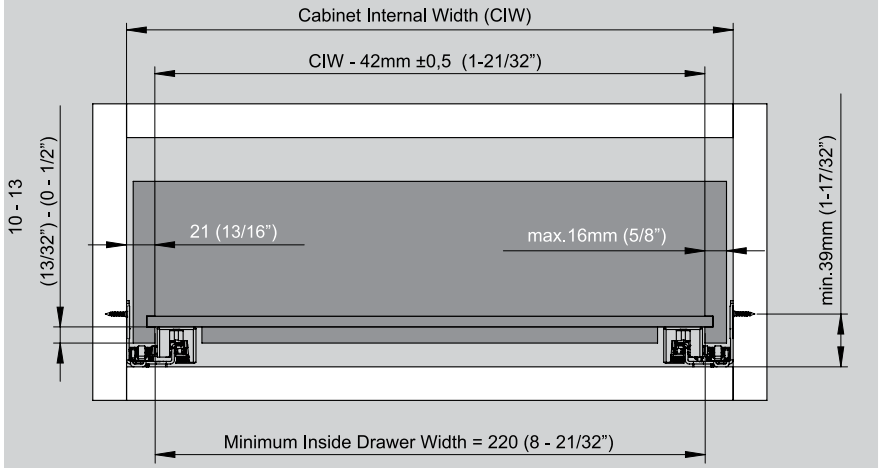

Drawer Back Preparation

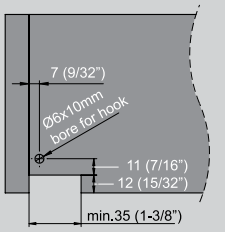

Rear Mounting Bracket

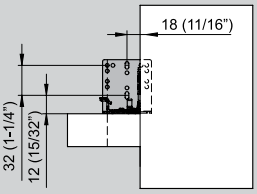

Note: For frame applications, use a minimum of tree screws per bracket

Compatible with plastic and metal rear mounting brackets.

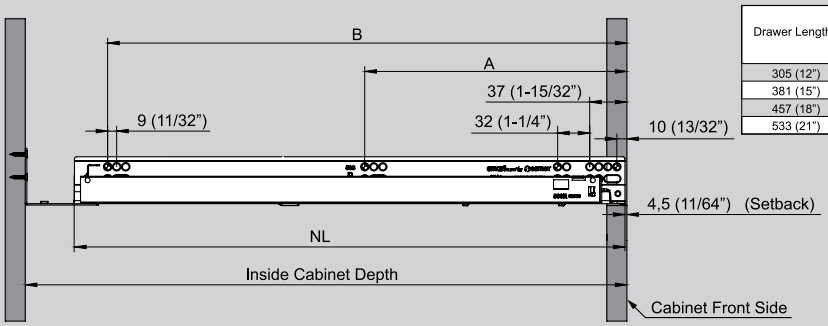

Drawer Length	Inside cabinet depth with rear attachment		Slide Length (NL)	Screw locations for frameless cabinets	
	Max.	Min.		A	B
305 (12")	370 (14-9/16")	328 (12-29/32")	319 (12-9/16")	165 (6-1/2")	261 (10-9/32")
381 (15")	446 (17-9/16")	404 (15-29/32")	395 (15-9/16")	165 (6-1/2")	357 (14-1/16")
457 (18")	522 (20-9/16")	480 (18-29/32")	471 (18-17/32")	261 (10-9/32")	453 (17-27/32")
533 (21")	599 (23-19/32")	557 (21-15/16")	548 (21-9/16")	261 (10-9/32")	517 (20-3/8")

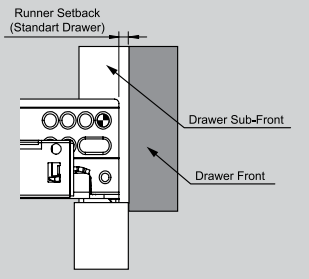

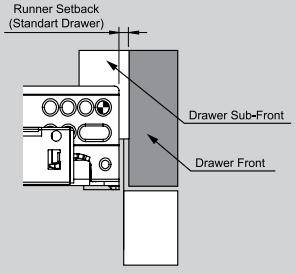

Runner Setback (Inset Drawer)				
		Setback		
Sub-Front Thickness	13 (0-33/64")	17,5 (11/16")	20,5 (13/16")	23,5 (59/64")
	16 (0-5/8")	20,5 (13/16")	23,5 (59/64")	26,5 (1-3/64")
	19 (0-3/4")	23,5 (59/64")	26,5 (1-3/64")	29,5 (1-5/32")
		16 (0-5/8")	19 (0-3/4")	22 (0-55/64")
		Drawer Front Thickness		

Runner Setback (Standart Drawer)		
		Setback
Sub-Front Thickness	13 (0-33/64")	1,5 (1/16")
	16 (0-5/8")	4,5 (11/64")
	19 (0-3/4")	7,5 (19/64")

Conversation Chart

1	1.5	2	3	4	5	5.5	6	7	8	9	9.5	10	11	12	13	13.5	14	15	16	17	17.5	18	19	20	20.5	21	22	23	24	24.5	25.4
1/32	1/16	5/64	1/8	5/32	13/64	7/32	15/64	9/32	5/16	23/64	3/8	25/64	7/16	15/32	33/64	17/32	35/64	19/32	5/8	43/64	11/16	45/64	3/4	25/32	13/16	53/64	55/64	29/32	15/16	31/32	1

Smart Slide FF Full Extension Synchronization Soft Close Lock-Fix

smart slide FACE FRAME

NO	CODE	DEFINITION/FEATURE	UNIT PRICE	PACKAGE CONTENT	PACKAGE PRICE	NOTE
1	127249411	Length: 12"	$ 21.49	6 Set	$ 128.94	
2	127249412	Length: 15"	$ 24.29	6 Set	$ 145.74	
3	127249413	Length: 18"	$ 25.89	6 Set	$ 155.34	
4	127249414	Length: 21"	$ 27.19	6 Set	$ 163.14	

Smart Slide FF Lock

NO	CODE	DEFINITION/FEATURE	UNIT PRICE	PACKAGE CONTENT	PACKAGE PRICE	NOTE
1	12790789	Right / 2D	$ 1.219	120 Pcs	$ 146.28	
2	12790790	Left / 2D	$ 1.219	120 Pcs	$ 146.28	

Smart Slide FF Metal Rear Mount Bracket

NO	CODE	DEFINITION/FEATURE	UNIT PRICE	PACKAGE CONTENT	PACKAGE PRICE	NOTE
1	12799924	Smart Slide Face Frame Bracket	$ 0.849	180 Pcs	$ 152.82	

SO CLASS Full Extension Slide - 46 mm

SO CLASS

- Engineered movement tehnology ensures smooth running performance
- High tolerance values for easy- assembly
- High rigidity & robust structure with high-quality balls & profiles
- Drawer Lengths: 250 – 700 mm
- 45 kg loading capacity

Cabinet Dimensions

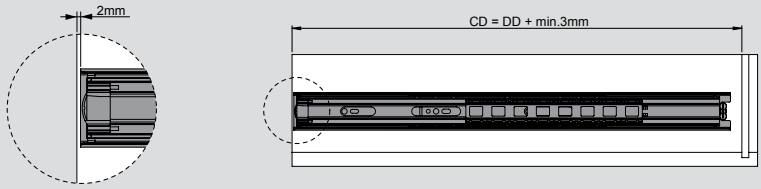

Technical Dimensions

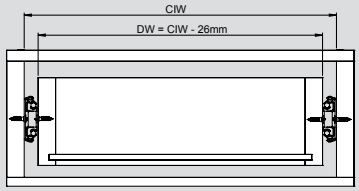

Drawer Dimensions

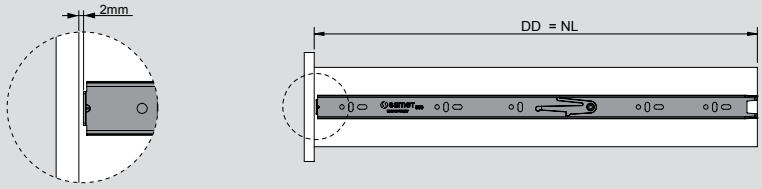

Parts

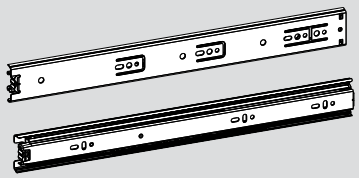

Recommended Screw

Ø3,5 x 16mm

CIW : Cabinet Inner Width
DW : Drawer Width

CD : Cabinet Depth
DD : Drawer Depth

NL : Nominal Length

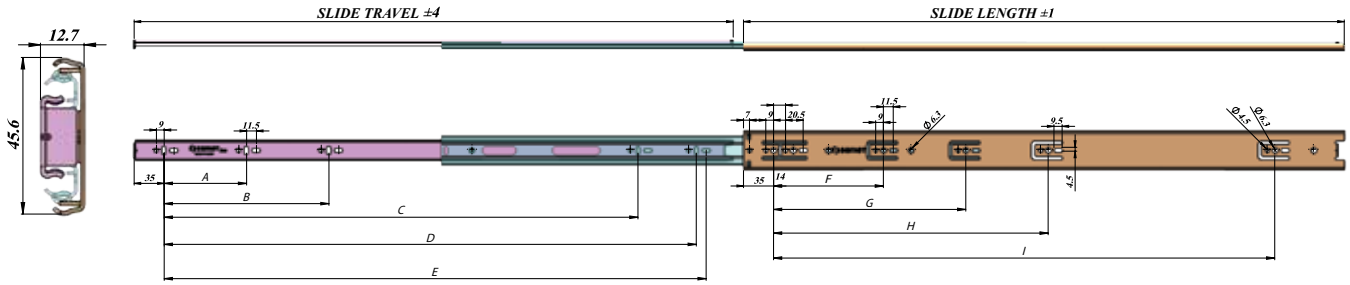

Code Clear Zinc	Slide Length mm	Slide Travel mm	Loading Capacity kg / lbs	Quantity in box set	Hole Positions mm								
					A	B	C	D	E	F	G	H	I
11661151000	250	250	45 / 99	12	-	-	-	170	181,5	128	-	-	-
11661152000	300	295	45 / 99	12	96	-	-	220	231,5	128	224	-	-
11661153000	350	354	45 / 99	12	96	-	-	256	267,5	128	224	-	-
11661154000	400	404	45 / 99	12	96	-	-	288	299,5	128	224	-	-
11661155000	450	447	45 / 99	12	96	-	302	370	381,5	128	224	-	-
11661156000	500	503	45 / 99	12	96	192	352	420	431,5	128	224	-	384
11661157000	550	560	45 / 99	12	96	192	402	470	481,5	128	224	-	434
11661158000	600	610	45 / 99	12	96	192	452	520	531,5	128	224	320	484
11661159000	650	660	45 / 99	12	96	192	502	570	581,5	128	224	320	534
11661160000	700	710	45 / 99	12	96	192	552	620	631,5	128	224	320	584

SO CLASS Full Extension Slide - 46 mm

SO CLASS

NO	CODE	DEFINITION/FEATURE	UNIT PRICE	PACKAGE CONTENT	PACKAGE PRICE	NOTE
1	11661151000	Length: 250 mm / Color: Clear Zinc	$ 9.59	12 Set	$ 115.08	
2	11661152000	Length: 300 mm / Color: Clear Zinc	$ 9.89	12 Set	$ 118.68	
3	11661153000	Length: 350 mm / Color: Clear Zinc	$ 10.69	12 Set	$ 128.28	
4	11661154000	Length: 400 mm / Color: Clear Zinc	$ 11.19	12 Set	$ 134.28	
5	11661155000	Length: 450 mm / Color: Clear Zinc	$ 11.89	12 Set	$ 142.68	
6	11661156000	Length: 500 mm / Color: Clear Zinc	$ 13.19	12 Set	$ 158.28	
7	11661157000	Length: 550 mm / Color: Clear Zinc	$ 14.69	12 Set	$ 176.28	
8	11661158000	Length: 600 mm / Color: Clear Zinc	$ 16.59	12 Set	$ 199.08	
9	11661159000	Length: 650 mm / Color: Clear Zinc	$ 18.29	12 Set	$ 219.48	
10	11661160000	Length: 700 mm / Color: Clear Zinc	$ 20.79	12 Set	$ 249.48	

Ball-Bearing Slide 46 mm Rear Bracket

NO	CODE	DEFINITION/FEATURE	UNIT PRICE	PACKAGE CONTENT	PACKAGE PRICE	NOTE
1	12799926	Ball-Bearing Slide Bracket	$ 0.619	96 Pcs	$ 59.42	

SO CLASS Full Extension Slide Soft Close - 46 mm

SO CLASS

- Engineered movement tehnology ensures smooth running performance
- Improved soft-close technology
- High tolerance values for easy- assembly
- High rigidity & robust structure with high-quality balls & profiles
- Drawer Lengths: 300 – 700 mm
- 30 kg loading capacity

Cabinet Dimensions

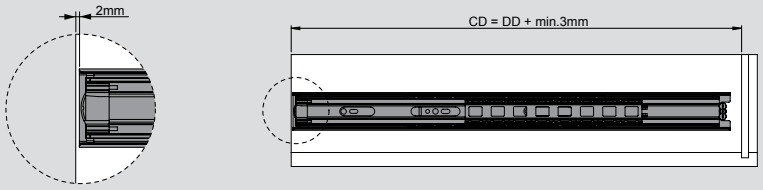

Technical Dimensions

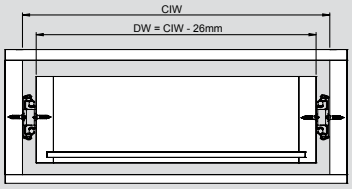

Drawer Dimensions

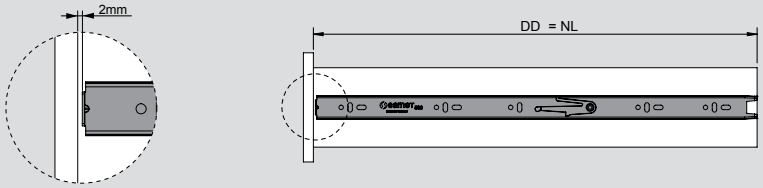

Parts

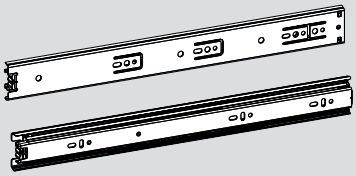

Recommended Screw

Ø3,5 x 16mm

CIW : Cabinet Inner Width
DW : Drawer Width

CD : Cabinet Depth
DD : Drawer Depth

NL : Nominal Length

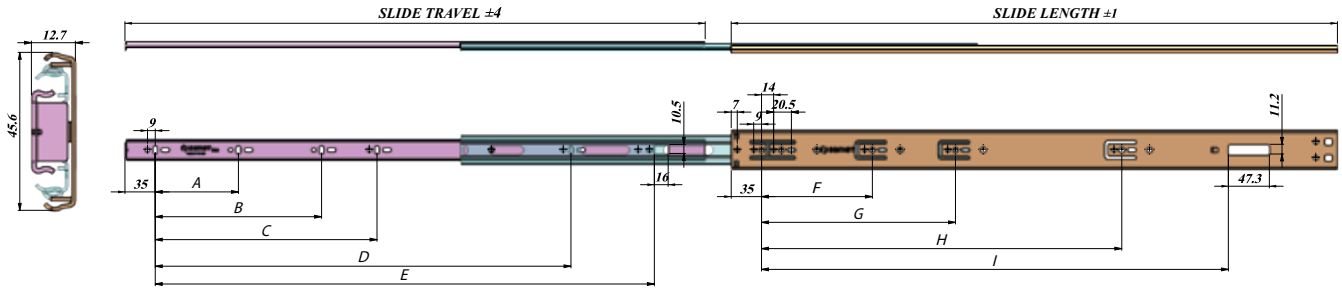

Code Clear Zinc	Slide Length mm	Slide Travel mm	Loading Capacity kg / lbs	Quantity in box set	Hole Positions mm								
					A	B	C	D	E	F	G	H	I
11662152000	300	252	30 / 66	12	-	-	-	-	176,2	-	-	-	139,1
11662153000	350	335	30 / 66	12	96	-	-	-	226,2	128	-	-	189,1
11662154000	400	385	30 / 66	12	96	-	-	224	276,2	128	-	-	239,1
11662155000	450	450	30 / 66	12	96	192	-	-	326,2	128	224	-	289,1
11662156000	500	500	30 / 66	12	96	192	-	320	376,2	128	224	-	339,1
11662157000	550	550	30 / 66	12	96	192	-	352	426,2	128	224	320	389,1
11662158000	600	600	30 / 66	12	96	192	-	384	476,2	128	224	352	439,1
11662159000	650	650	30 / 66	12	96	192	256	448	526,2	128	224	416	489,1
11662160000	700	700	30 / 66	12	96	192	256	480	576,2	128	224	416	539,1

SO CLASS Full Extension Slide Soft Close - 46 mm

SO CLASS

NO	CODE	DEFINITION/FEATURE	UNIT PRICE	PACKAGE CONTENT	PACKAGE PRICE	NOTE
1	11662152000	Length: 300 mm / Color: Clear Zinc	$ 16.19	12 Set	$ 194.28	
2	11662153000	Length: 350 mm / Color: Clear Zinc	$ 16.99	12 Set	$ 203.88	
3	11662154000	Length: 400 mm / Color: Clear Zinc	$ 17.59	12 Set	$ 211.08	
4	11662155000	Length: 450 mm / Color: Clear Zinc	$ 18.19	12 Set	$ 218.28	
5	11662156000	Length: 500 mm / Color: Clear Zinc	$ 19.59	12 Set	$ 235.08	
6	11662157000	Length: 550 mm / Color: Clear Zinc	$ 20.99	12 Set	$ 251.88	
7	11662158000	Length: 600 mm / Color: Clear Zinc	$ 22.89	12 Set	$ 274.68	
8	11662159000	Length: 650 mm / Color: Clear Zinc	$ 24.59	12 Set	$ 295.08	
9	11662160000	Length: 700 mm / Color: Clear Zinc	$ 27.19	12 Set	$ 326.28	

Ball-Bearing Slide 46 mm Rear Bracket

NO	CODE	DEFINITION/FEATURE	UNIT PRICE	PACKAGE CONTENT	PACKAGE PRICE	NOTE
1	12799926	Ball-Bearing Slide Bracket	$ 0.619	96 Pcs	$ 59.42	

Slow, Easy and Quiet

Specially designed to make a positive contribution to the consumer's life, SAMET Lift Up Door Systems are innovative, elegant and convenient, as well as powerful and durable.

In each cell you will feel the quality standards, innovative structure and design power of Samet.

Read the QR code to learn more about lift-up door systems.

Install a QR code reader for your operating system. Then start the QR code reader and keep your smartphone or tablet approximately 20 cm above the QR code.

d-lite **lift**

- D-Lite Lift Single Lift-Up Door Mechanism

Lift-Up Door Systems

Quick reference list >

> MultiLift Double Lift-Up Door Mechanism

- Slow and silent closing
- Gradual opening
- 3-21 kg carrying capacity
- 540-900 mm door height

Unit Price: **$ 196.87** /Set

Page 88

> D-Lite Lift Single Lift-Up Door Mechanism

- Easy installation without hinges
- Slow and silent closing
- Gradual opening
- Same mechanism for all cover lengths
- Maximum 14 kg carrying capacity

Unit Price: **$ 59.49** /Set

Page 90

MultiLift Double Lift-Up Door Mechanism Wholesale Package

MultiLift

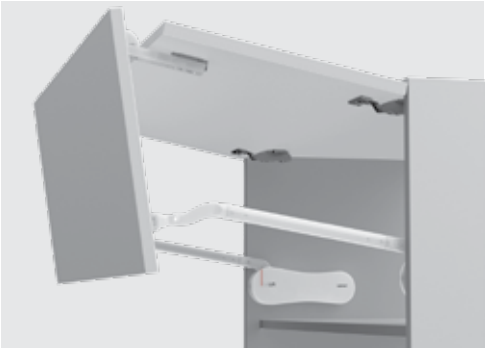

- 105° maximum Opening Angle
- Double Door Heights from 700 mm (27.55") to 900 mm (35.43")
- Door Widths up to: 1,200mm (47.24")
- Use in conjunction with Included hinges and mounting plates
- Improved mechanical design
- Fully adjustable after mounting with use of a #2 Pozi drive tip on a manual screwdriver or a #2 Pozi drive driver bit on a low speed battery powered drill
- Sold in Sets: Left Hand and Right Hand mechanisms
- Weight Range: 4.85 lbs to 46.30 lbs

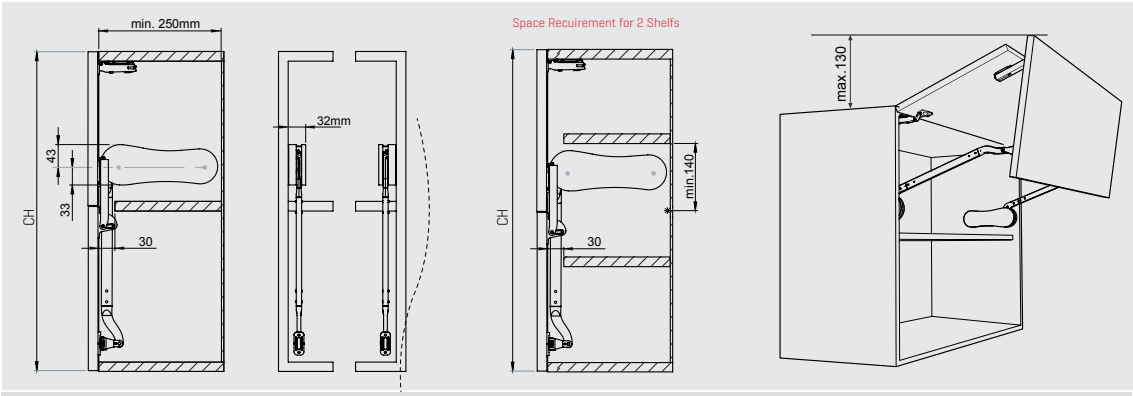

Technical Dimensions

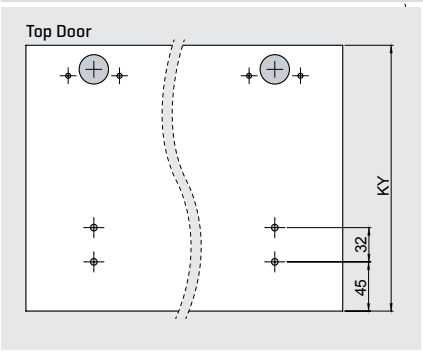

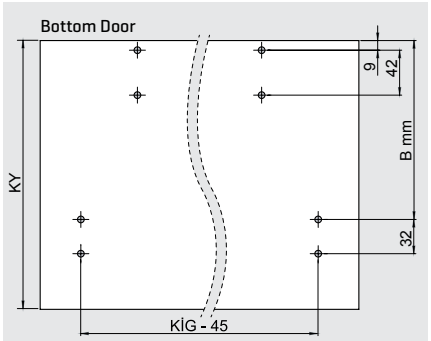

CH (mm)	B mm
550 (540-580)	189
600 (580-640)	209
650 (640-700)	239
720 (700-780)	269
800 (780-840)	309
865 (840-900)	339

Euro Screw

Product Selection Table

DOUBLE DOOR HEIGHT RANGE	POWER UNIT	A1 1249902		B1 1249903		C1 1249904		D1 1249905		E1 1249917	
	Multilift Set	Min lbs	Max lbs	Min lbs	Max lbs	Min lbs	Max lbs	Min lbs	Max lbs	Min lbs	Max lbs
700mm (27.55") to 780mm 30.70")	1240604■00	-	-	6.61	11.02	11.02	16.53	14.33	20.94	20.94	30.86
780mm (30.70") to 840mm 33.07")	1240605■00	-	-	-	-	8.81	14.33	11.02	16.53	16.53	26.46
840mm (33.07") to 900mm 35.43")	1240606■00	-	-	-	-	6.61	11.02	11.02	14.33	14.33	22.05

*Include the weight of any door handle(s) in your calculation ■ 3: Grey 1: White

Assembly Hole Centers

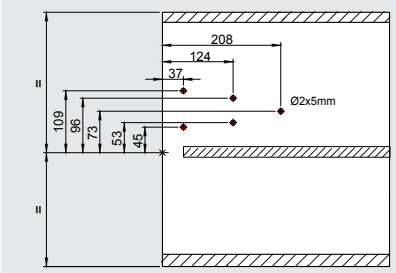

Cabinet Internal Width: **CIW**
Door Width : **DW**
Door Heigth : **DH**
Cabinet Heigth : **CH**

Guide Hole Centers

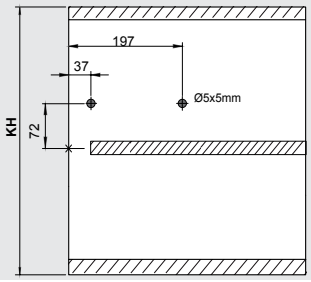

MultiLift Double Lift-Up Door Mechanism Wholesale Package

MultiLift

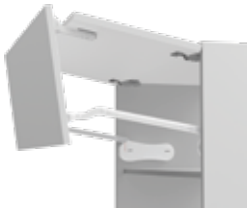

NO	CODE	DEFINITION/FEATURE	UNIT PRICE	PACKAGE CONTENT	PACKAGE PRICE	NOTE
1	1240604100	Cabinet Height: 720 / Color: White	$ 165.09	1 Set	$ 165.09	
2	1240604300	Cabinet Height: 720 / Color: Gray	$ 165.09	1 Set	$ 165.09	
3	1240605100	Cabinet Height: 800 / Color: White	$ 165.09	1 Set	$ 165.09	
4	1240605300	Cabinet Height: 800 / Color: Gray	$ 165.09	1 Set	$ 165.09	
5	1240606100	Cabinet Height: 865 / Color: White	$ 165.09	1 Set	$ 165.09	
6	1240606300	Cabinet Height: 865 / Color: Gray	$ 165.09	1 Set	$ 165.09	

MultiLift Power Unit

MultiLift

NO	CODE	DEFINITION/FEATURE	UNIT PRICE	PACKAGE CONTENT	PACKAGE PRICE	NOTE
1	1249902	Power Unit: A1	$ 15.89	10 Pcs	$ 158.90	
2	1249903	Power Unit: B1	$ 15.89	10 Pcs	$ 158.90	
3	1249904	Power Unit: C1	$ 15.89	10 Pcs	$ 158.90	
4	1249905	Power Unit: D1	$ 15.89	10 Pcs	$ 158.90	
5	1249917	Power Unit: E1	$ 15.89	10 Pcs	$ 158.90	

* Two power units are required per Multilift Set

D-Lite Lift Hingeless Lift-Up Door Mechanism Wholesale Package

d-lite **lift**

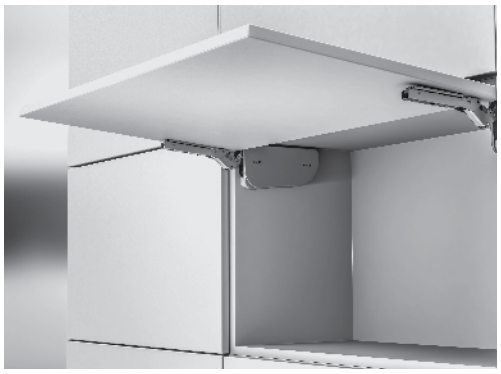

- Three models to choose from: A1, B1, C1
- 90° Opening angle with use of included opening angle stopper, or standard 107° opening angle
- Door heights from: 200mm (7.87") To 600mm (23.62")
- Door widths up to: 1,200mm (47.24")
- Door weights from: 2.09 Lbs to 32.41 Lbs
- Sold in sets with all needed components for single door application
- Clip-On door attachment and removal
- 3D adjustment (side/height/depth)
- Gradual-opening mechanism allows doors to stop at your desired level
- Fully adjustable soft-closing and silent movement
- Fully mechanical lifting coil spring system allows a lifetime of stability

TWO SIDED APPLICATIONS Door Height	A1 12407610003001		B1 12407710003001		C1 12407810003001	
	Min lbs	Max lbs	Min lbs	Max lbs	Min lbs	Max lbs
200mm (7.87")	7.93	14.33	11.02	21.38	15.43	32.41
201mm (7.91") **to 250mm** (9.84")	7.49	11.68	8.81	16.53	12.13	26.90
251mm (9.88") **to 300mm** (11.81")	4.18	10.80	6.61	13.01	9.92	21.83
301mm (11.85") **to 350mm** (13.77")	3.52	7.93	6.17	11.02	8.81	17.42
351mm (13.81") **to 400mm** (15.74")	3.08	6.83	5.29	9.25	7.93	15.87
401mm (15.78") **to 450mm** (17.71")	2.86	6.17	4.85	8.37	7.05	13.89
451mm (17.75") **to 500mm** (19.68")	2.64	5.51	4.40	7.49	6.17	12.13
501mm (19.72") **to 550mm** (21.65")	2.20	4.85	3.85	6.61	5.73	11.24
551mm (21.69") **to 600mm** (23.62")	2.09	4.40	3.74	6.17	5.51	10.14

*Include the weight of any door handle(s) in your calculation

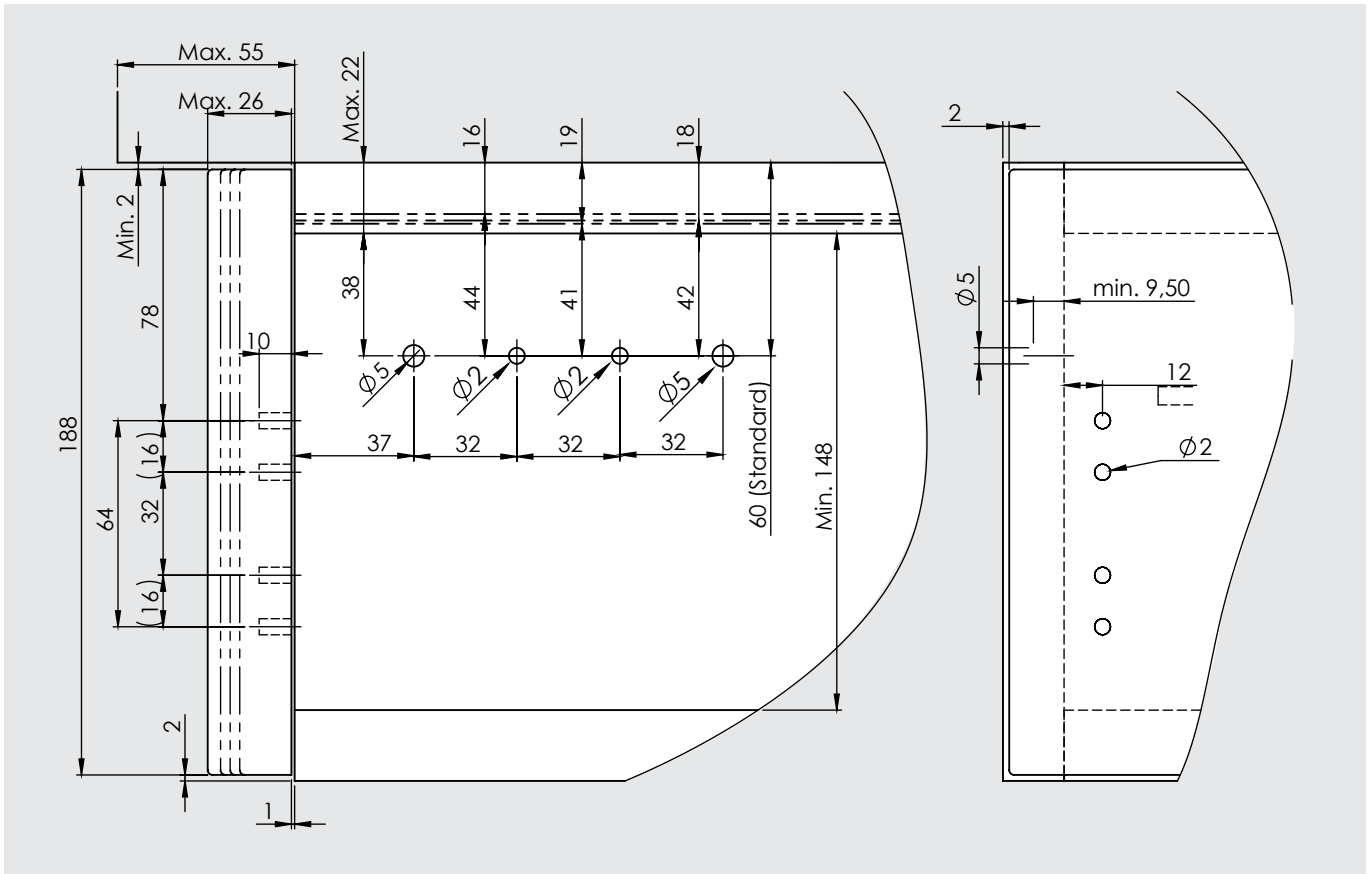

D-Lite Lift Hingeless Lift-Up Door Mechanism Wholesale Package

NO	CODE	DEFINITION/FEATURE	UNIT PRICE	PACKAGE CONTENT	PACKAGE PRICE	NOTE
1	12407610001001	Power Unit: A1 / Color: White	$ 59.49	1 Set	$ 59.49	
2	12407610003001	Power Unit: A1 / Color: Gray	$ 59.49	1 Set	$ 59.49	
3	12407610006001	Power Unit: A1 / Color: Mocha	$ 59.49	1 Set	$ 59.49	
4	12407610007001	Power Unit: A1 / Color: Anthracite	$ 59.49	1 Set	$ 59.49	
5	12407710001001	Power Unit: B1 / Color: White	$ 59.49	1 Set	$ 59.49	
6	12407710003001	Power Unit: B1 / Color: Gray	$ 59.49	1 Set	$ 59.49	
7	12407710006001	Power Unit: B1 / Color: Mocha	$ 59.49	1 Set	$ 59.49	
8	12407710007001	Power Unit: B1 / Color: Anthracite	$ 59.49	1 Set	$ 59.49	
9	12407810001001	Power Unit: C1 / Color: White	$ 59.49	1 Set	$ 59.49	
10	12407810003001	Power Unit: C1 / Color: Gray	$ 59.49	1 Set	$ 59.49	
11	12407810006001	Power Unit: C1 / Color: Mocha	$ 59.49	1 Set	$ 59.49	
12	12407810007001	Power Unit: C1 / Color: Anthracite	$ 59.49	1 Set	$ 59.49	

D-Lite Lift Drilling Template

NO	CODE	DEFINITION/FEATURE	UNIT PRICE	PACKAGE CONTENT	PACKAGE PRICE	NOTE
1	1249927	Drilling Template	$ 93.69	10 Set	$ 936.90	

Gas Spring

NO	CODE	DEFINITION/FEATURE	UNIT PRICE	PACKAGE CONTENT	PACKAGE PRICE	NOTE
1	1240290	Power: 60 Newton / Color: Aluminum	$ 6.59	100 Pcs	$ 659.00	
2	1240287	Power: 80 Newton / Color: Aluminum	$ 6.59	100 Pcs	$ 659.00	
3	1240288	Power: 100 Newton / Color: Aluminum	$ 6.59	100 Pcs	$ 659.00	
4	1240289	Power: 120 Newton / Color: Aluminum	$ 6.59	100 Pcs	$ 659.00	

Performa Lid Stay

NO	CODE	DEFINITION/FEATURE	UNIT PRICE	PACKAGE CONTENT	PACKAGE PRICE	NOTE
1	1240282	Length: 37 mm / Color: Nickel	$ 14.19	100 Pcs	$ 1,419.00	

Make Space for yourself...

Samet Wooden Sliding Door Systems developed to permit optimum use of furniture and maximum space for the end user, combines quality, performance and functionality.

Read the QR code to learn more about sliding door systems..

Install a QR code reader for your operating system. Then start the QR code reader and keep your smartphone or tablet approximately 20 cm above the QR code.

- SMT 110 Plus Upper Guided Sliding Door System

SMT 75T Adjustable Tween Sliding Door System

SMT75T

- 75 kg carrying capacity
- Smoothly and silently running
- 8 mm upwards/downwards adjustability

Standard Set Includes

Adjustable Wheel Mechanism x4

Optional

Soft close Mechanism
1280109

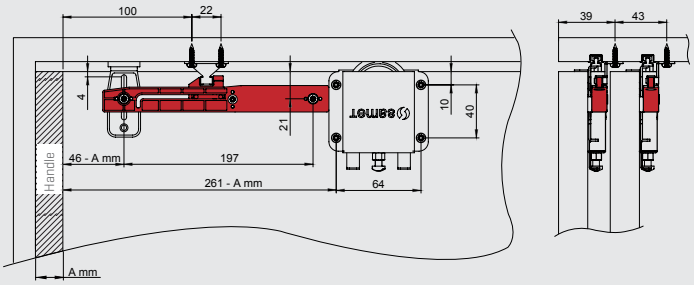

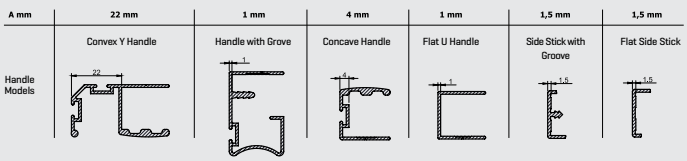

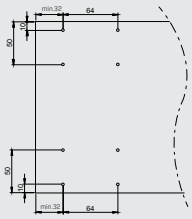

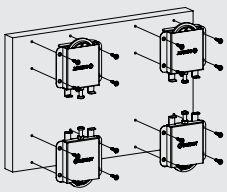

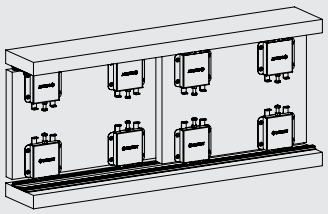

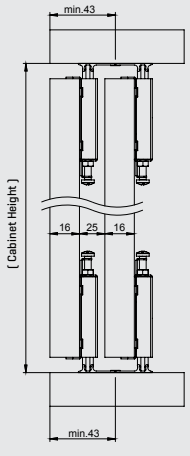

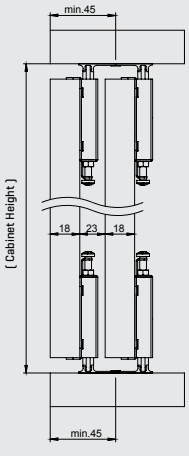

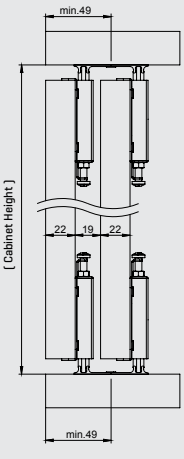

SMT 75T Adjustable Tween Wheel Mechanism

SMT75T

NO	CODE	DEFINITION/FEATURE	UNIT PRICE	PACKAGE CONTENT	PACKAGE PRICE	NOTE
1	12800975T	SMT75T - Package: 4 Sets / Bag - 24 Bags/Package	$ 15.49	24 Set	$ 371.76	

SMT 75T 60,75,80 kg Aluminum Single Female Upper Rail

SMT75T

NO	CODE	DEFINITION/FEATURE	UNIT PRICE	PACKAGE CONTENT	PACKAGE PRICE	NOTE
1	128018471250	Length: 2.5 mm / Color: Matte Eloxal	$ 5.29	20 Unit	$ 105.80	

SMT 75T 75 Kg Aluminum Eco Double Female Lower Rail

SMT75T

NO	CODE	DEFINITION/FEATURE	UNIT PRICE	PACKAGE CONTENT	PACKAGE PRICE	NOTE
1	1280184821250	Length: 2.5 mm / Color: Matte Eloxal	$ 20.49	12 Unit	$ 245.88	

Soft Close Mechanism

NO	CODE	DEFINITION/FEATURE	UNIT PRICE	PACKAGE CONTENT	PACKAGE PRICE	NOTE
1	1280109	75 kg	$ 24.39	48 Set	$ 1,170.72	

Fixing your expectations high!

Bringing together all the components that make up an item of furniture is just as important as the final product itself.

Samet Accessories & Fiting Systems make for a more practical production process, without compromising quality or stability.

SAMET is at the top of its game in every step of the process, from the raw wood to the final product.

Read the QR code to learn more about Accessories & Fitting Systems.

Install a QR code reader for your operating system. Then start the QR code reader and keep your smartphone or tablet approximately 20 cm above the QR code.

jetfix

- Jetfix Connecting Fitting

Accessories & Fitting Systems
Quick reference list >

> Samfix

Connecting fitting consists of cam, bolt and dowel
Easy installation in module connections
Preventing metal surface appearing with cover

Total Unit Price: **$ 0.436** Page 102

Samfix Cam (1080019)	**Unit Price:**	**$ 0.209**
Samfix Bolt (10800211)	**Unit Price:**	**$ 0.139**
Samfix Dowel (1080034)	**Unit Price:**	**$ 0.039**
Samfix Cover (108344)	**Unit Price:**	**$ 0.049**

It consists of the above.

> Jetfix

Plastic expandable dowel on the steel bolt
Quick and easy mounting on module connections
Ø10 diameter

Unit Price: **$ 0.149** Page 104

> Daset

Usage as a set for right and left
Various color options
80 kg loading capacity

Total Unit Price: **$ 4.347** Page 106

Daset Cabinet Hanger Right White(1990441)	**Unit Price:**	**$ 1.849**
Daset Cabinet Hanger Left White(1990442)	**Unit Price:**	**$ 1.849**
Daset Hanger Steel(1990462)	**Unit Price:**	**$ 0.649**

It consists of the above.

Samfix Cam

samfix

Steps to prepare the wood;

- Drill a screw hole of 34 mm or 24 mm depth until half of the walls thickness using an 8 mm diameter.
- Drill a pin hole of 15 mm diameter. The depth must be 4,5 mm lower than the screw hole axis.
- Drill a hole for dowels or screws in the axis previously drilled to the sideway as shown on the table.

Mounting Steps;

- Prepare the wood according to the given measurements.
- Place the fitting to the pin hole.
- Screw a shaft into the fitting.
- Place the pin with the writings heading to the top and the arrow pointing to the shaft.
- Put the shaft on the pin.
- Turn the pin towards the locking sign.
- Place the Cover Cap on the pin's top to assure an esthetic coverage.

* All dimensions in the graphs above are measured in mm.

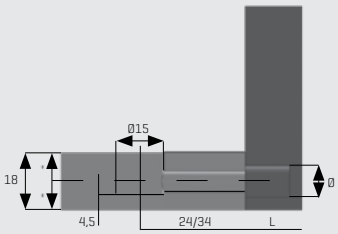

	Ø mm	L mm
Ø8x10 Dowel	Ø8	11
Ø8x12 Dowel	Ø8	13
Ø10x10 Dowel	Ø10	11
Ø10x12 Dowel	Ø10	13
Euro Screw	Ø5	12
Zamac Dowel	Ø8	13

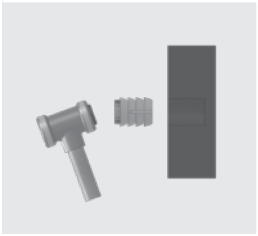

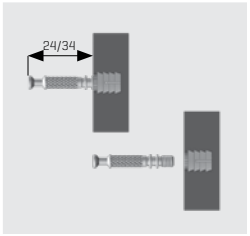

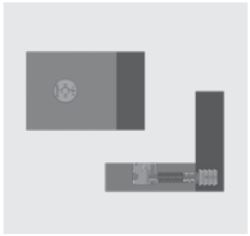

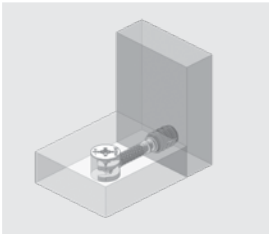

Cam Types

Cam 12 mm

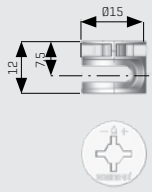

Cam 13.2 mm

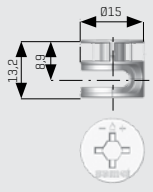

Bolt Types

24 mm Steel Bolt M6 Screw Type

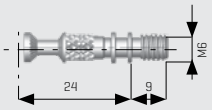

34 mm Steel Bolt M6 Screw Type

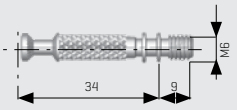

24 mm Steel Bolt Euro Screw Type

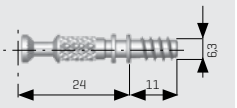

34 mm Steel Bolt Euro Screw Type

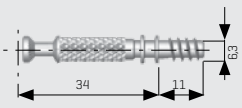

Dowel Types

Ø10x12 - Cracked M6 Plastic Dowel

Ø10x10 - Cracked M6 Plastic Dowel

Ø8x12 - Cracked M6 Plastic Dowel

Ø8x10 - Cracked M6 Plastic Dowel

Samfix Cam

NO	CODE	DEFINITION/FEATURE	UNIT PRICE	PACKAGE CONTENT	PACKAGE PRICE	NOTE
1	1080016	Size: Ø15x12 / Color: Zinc	$ 0.199	2,000 Pcs	$ 398.00	
2	1080019	Size: Ø15x13 / Color: Zinc	$ 0.209	2,000 Pcs	$ 418.00	

Samfix Bolt

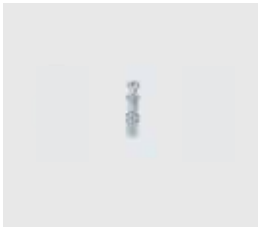

NO	CODE	DEFINITION/FEATURE	UNIT PRICE	PACKAGE CONTENT	PACKAGE PRICE	NOTE
1	10800211	Size: M6x34mm / Color: Steel Zn	$ 0.139	2,000 Pcs	$ 278.00	
2	1080027	Size: M6x24mm / Color: Steel Zn	$ 0.129	2,000 Pcs	$ 258.00	
3	10800231	Euro Screw / Size: 6.3x34 mm / Color: Steel Zn	$ 0.139	2,000 Pcs	$ 278.00	
4	1080026	Euro Screw / Size: 6.3x24 mm / Color: Steel Zn	$ 0.129	2,000 Pcs	$ 258.00	

Samfix Dowel

NO	CODE	DEFINITION/FEATURE	UNIT PRICE	PACKAGE CONTENT	PACKAGE PRICE	NOTE
1	1080033	Plastic / Channeled Striped / Size: M6 Ø10x10	$ 0.039	2,000 Pcs	$ 78.00	
2	1080034	Plastic / Channeled Striped / Size: M6 Ø10x12	$ 0.039	2,000 Pcs	$ 78.00	
3	108401	Zamak / Size: M6 Ø8x13	$ 0.149	2,000 Pcs	$ 298.00	

Samfix Cover

NO	CODE	DEFINITION/FEATURE	UNIT PRICE	PACKAGE CONTENT	PACKAGE PRICE	NOTE
1	108344	Color: White	$ 0.049	2,000 Pcs	$ 98.00	

Jetfix Dowel + Bolt

jetfix

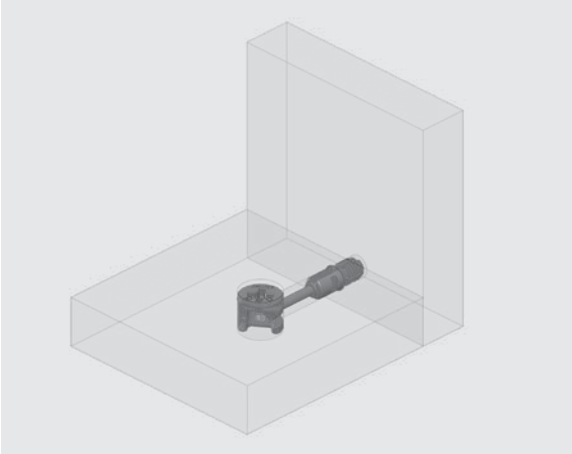

- It includes plastic expandable dowel on the steel bolt.
- It provides easy and fast mounting for corner connections with Samfix Cam.
- It has two dowel versions as Ø8 and Ø10 diameter.

* All dimensions in the graphs above are measured in mm.

Dimensions ve Mounting

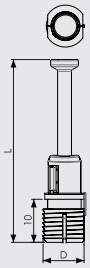

T= S/2 mm
Ø= Ø8 mm, Ø10 mm

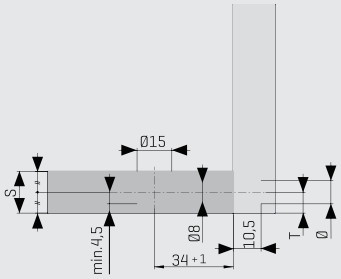

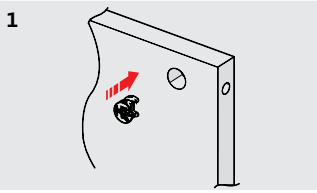

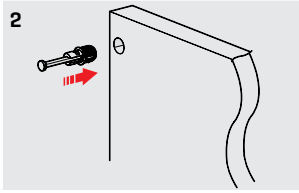

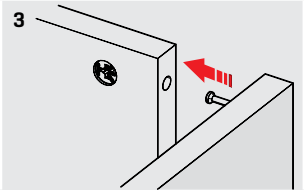

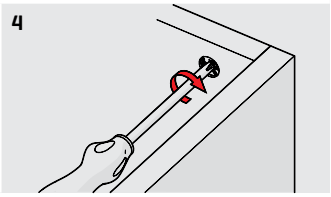

Jetfix Dowel + Bolt

jetfix

NO	CODE	DEFINITION/FEATURE	UNIT PRICE	PACKAGE CONTENT	PACKAGE PRICE	NOTE
1	1080427	Jetfix 34 Axis Connecting / Ø10X10 Dowel + Bolt	$ 0.149	2,000 Pcs	$ 298.00	

Daset Cabinet Hanger

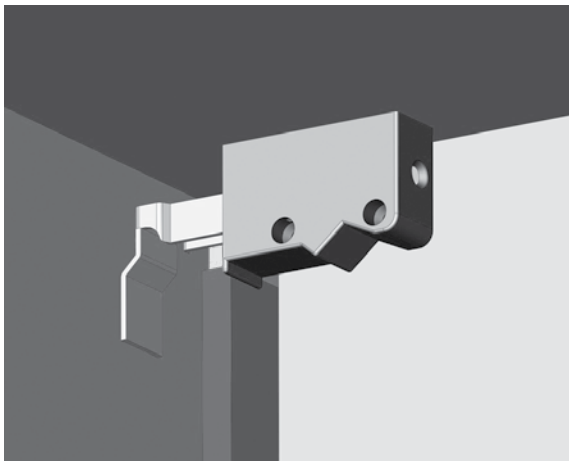

- Finish: White
- It should be used as a set for right and left.
- Connecting systems:
  - Classic screw based hook system.
  - Steel hanger system for side-to-side modules.
- Load Capacity: 80 KG per pair.

* All dimensions in the graphs above are measured in mm.

Dimensions

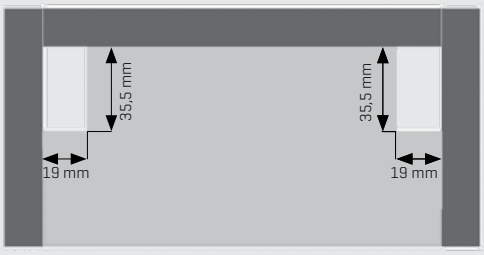

Mounting

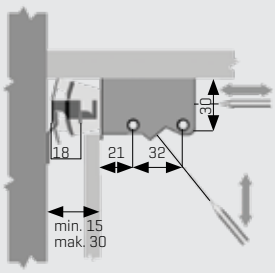

Daset Cabinet Hanger

NO	CODE	DEFINITION/FEATURE	UNIT PRICE	PACKAGE CONTENT	PACKAGE PRICE	NOTE
1	1990441	Cabinet Hanger / Right / Color: White	$ 1.849	250 Pcs	$ 462.25	
2	1990442	Cabinet Hanger / Left / Color: White	$ 1.849	250 Pcs	$ 462.25	
3	1990462	Hanger Sheet Metal	$ 0.649	250 Pcs	$ 162.25	
4	1990463	Hanger Slide	$ 40.79	20 Pcs	$ 815.80	